TELLURE RÔTA BRACKETS

Light-duty SL

Carrying capacity: 130 daN
Diameters: 80-125 mm
Fitting: with top plate, with bolt hole
Brake: front

Page 15

Standard-duty NL-NLX

Carrying capacity: 400 daN
Diameters: 65-280 mm
Fitting: with top plate, with bolt hole, with threaded stem, with Zamak stem
Brake: front, rear, centralised

Page 16

Medium-duty M

Carrying capacity: 500 daN
Diameters:150-200 mm
Fitting: with top plate
Brake: adjustable front

Page 18

Heavy-duty P-PX

Carrying capacity: 750 daN
Diameters: 80-250 mm
Fitting: with top plate
Brake: adjustable front, rear

Page 19

Extra heavy-duty EP

Carrying capacity: 1600daN
Diameters:100-250 mm
Fitting: with top plate
Brake: adjustable rear

Page 20

Electrowelded EE MHD

Carrying capacity: 1000 daN
Diameters: 100-250 mm
Fitting: with top plate
Brake: adjustable rear

Page 21

Electrowelded EE HD-EE EHD

Carrying capacity: 3500 daN
Diameters:150-400 mm
Fitting: with top plate
Brake: adjustable rear (EE HD only)

Page 22

Twin electrowelded EEG MHD

Carrying capacity: 1000 daN
Diameters: 100-125 mm
Fitting: with top plate

Page 23

Twin electrowelded EEG HD - EEG EHD

Carrying capacity: 4300 daN
Diameters:125-300 mm
Fitting: with top plate

Page 24

Scaffolding TRAB

Carrying capacity: 750 daN (according to EN 1004:2005)
Diameters:125-200 mm
Fitting: with top plate, with solid stem, with threaded stem with leveller

Page 25

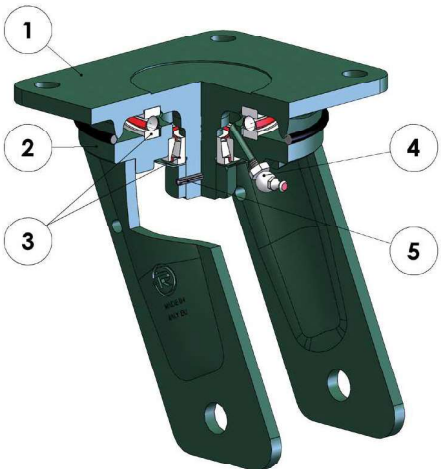

1) Top plate: forged steel with integrated pin painted with dark green powder
2) Fork: drawn legs electrowelded to the flange painted with dark green powder
3) Swivel actions: axial ball bearing and tapered roller bearing
4) Grease nipple
5) Anti-loosening system nut

Electrowelded EE HD and EHD - max carrying capacity 3500 daN

Bracket suitable for applications with loads up to 3500 daN, even under heavy-duty conditions (mechanised towing and high speeds). Fixing plate made of thick forged steel with integrated pin, fork with thick legs shaped by means of deep-drawing process and welded to the flange; the axial and taper bearing guarantee excellent manoeuvrability also at full load and increase the side impact resistance of the bracket. Bracket grease nipple, locknut anti-loosening system, protective o-ring against dust and green powder painting guarantee its extremely long duration and simple maintenance.

Brake: adjustable rear (EE HD model only)
Directional lock available (EE HD model only)

Fittings with wheels

SERIES 62GH SERIES 63GH SERIES 64 SERIES 68 SERIES 72GH

Fitting with top plate

									4 km/h
EE HD	150	90	218	175x140	140x105	14.5	50	18	1600
	200	90	275	175x140	140x105	14.5	65	18	1600
	250	90	320	175x140	140x105	14.5	74	18	1600
	250	90	325	200x160	160x120	17	74	18	2500
	300	90	360	175x140	140x105	14.5	81	18	1600
	300	90	365	200x160	160x120	17	81	18	2500
EE EHD	300	130	384	250x200	210x160	19	78	24	3500
	400	130	475	250x200	210x160	19	95	24	3500