Shift Chain®

Shift Chain is a next generation after CPS mini Chain and it applies to overall industrial sectors where cable and hose' protection is required. It has a new concept as Bending Radius value is determined according to each different 'BR' unit.
BR unit helps Shift Chain to perform 30% improved Unsupported Length compared to CPS mini Chain with 6 supporting areas that endure the weight of Cable Chain.

Feature & Strong point of Shift Chain

New concept adopted Cable Chain to adjust R value easily and freely

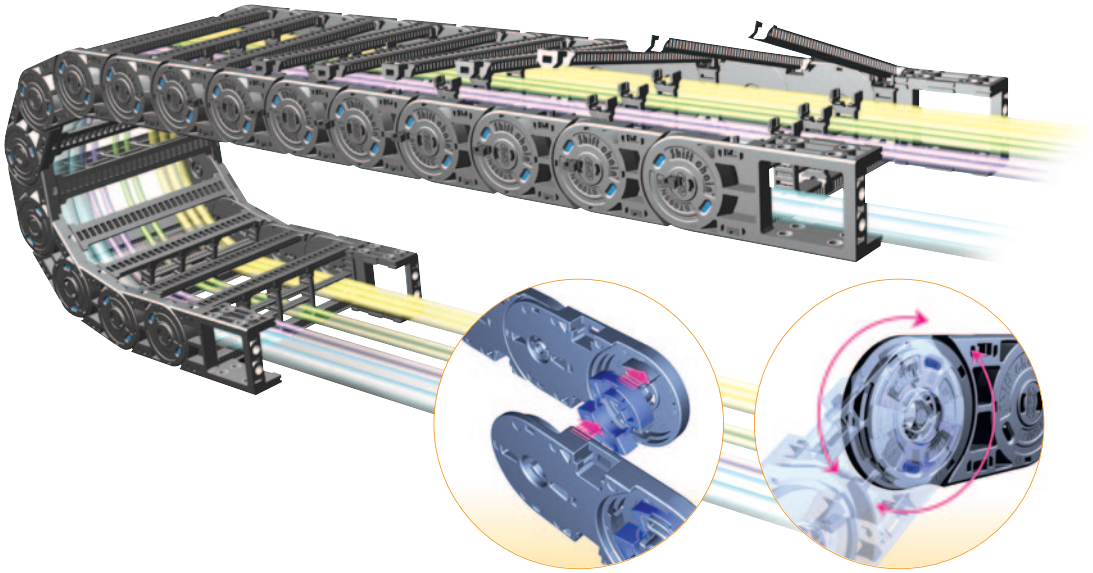

It helps to improve production capacity and to save cost with its convenient management of parts such as ‘Side Band’, ‘Frame’, ‘Frame pin’ and ‘BR’

Shift Chain can be applied to many different circumstances from small sized equipment to heavy equipment to protect cable and hose.

Unsupported Length Much Improved

Shift Chain performs outstanding Unsupported Length compared to previous CPS mini Chain. There are 6 supporting sections that make Shift Chain endure rigid linear status compared to CPS mini Chain that only has 2 supporting sections.

Feature & Strong point of Shift Chain

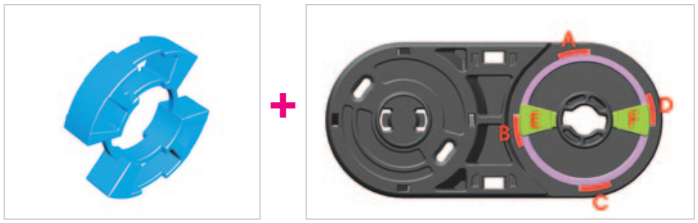

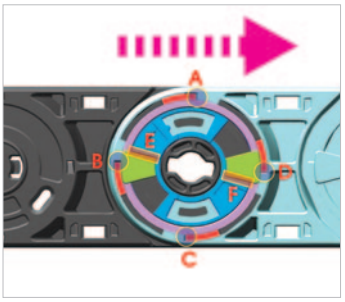

Supporting points when the side bands connected. (A,B,C,D,E,F)

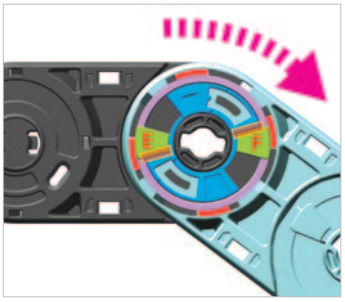

Supporting points when the side bands bent. (E,F)

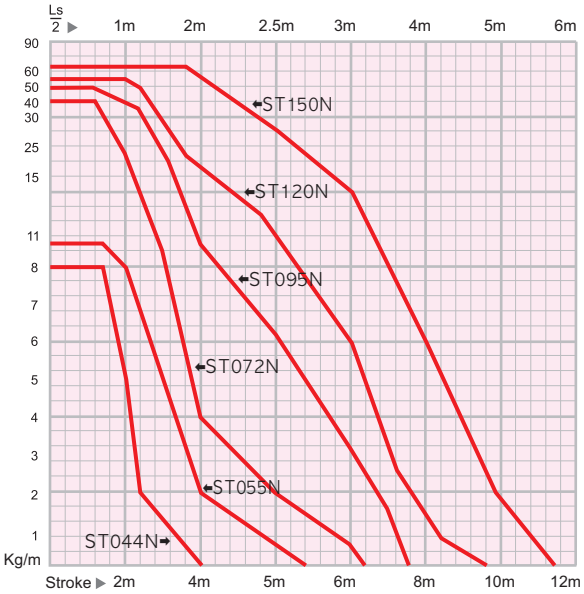

Shift chain Self- Supporting Length

R value is determined according to each different BR

Specially designed side band of the shift chain is determined according to each different br unit at the same model. This structure side band could offer only one side band inventory stock with different BR unit inventory stocks for various R value.

This is very cost effective product and could save inventory cost as well.

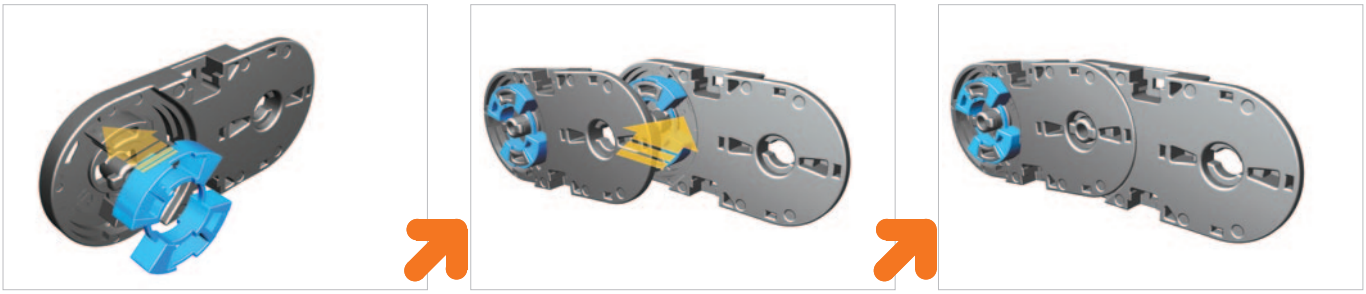

BR that has each different Bending Radius Value is composed with each different size of Shift Chain. Please refer to the Page38, 42.

Assemble BR to Side Band

Connect Side Band to Side Band

Radius value is decided by each different BR unit

Feature & Strong point of Shift Chain

Adoption of FEB helps Cable Chain' Efficient Fixation

Shift Chain' bracket called FEB has 3 fixing section that makes Cable Chain fixed securely and conveniently to counterpart.
It also includes steel Insert and it can be moved up and down to each 45° like in the image below

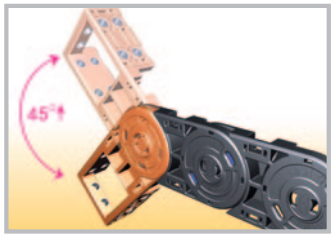

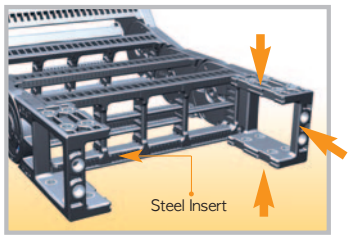

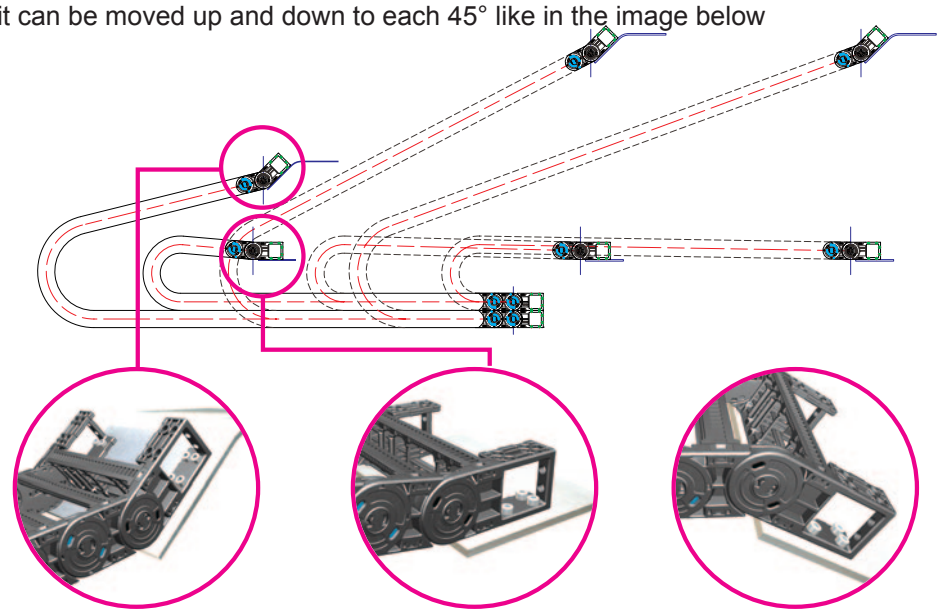

FEB mounted upwards | FEB mounted horizontally | FEB mounted downwards

Special design of the flames to prevent the divider's floating

Frame with teeth every 5mm makes frame does not move to left and right side but placed firmly.

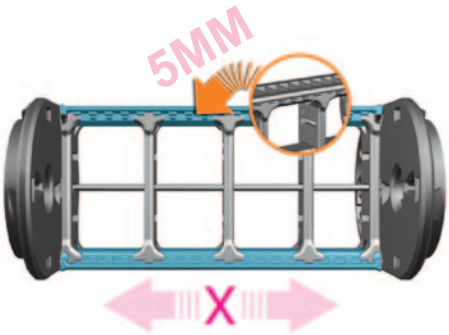

Feature of Hinge Type of Frame

One side of Frame is pin type and the other side of Frame is hinge type that makes easy maintenance of assembly and disassembly.

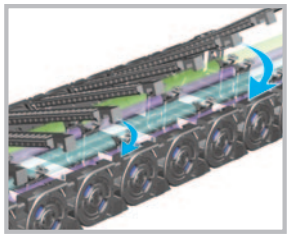

ST044N, 055N :
One side is Hinge and the other side is Hook

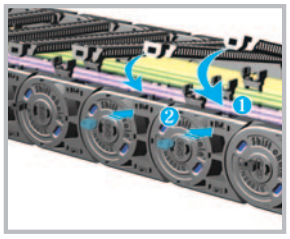

ST 072N, 095N, 120N, 150N :
One side is Hinge and the other side is Pin

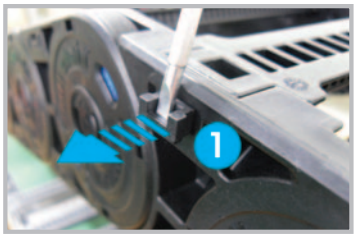

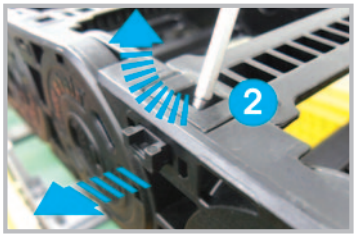

Feature & Strong point of Shift Chain

Secure Space by utilizing Divider and Separator

Divider and Separator makes secure protection of cable and hose.
DV-S : Used to fix a separator that is the same length as the frames
DV-M : Used to separate individual cables
DV-T : Used at center position to support frame longer than 125mm and up
DV-W : Used to hold the cables in place at both ends of the cable chain

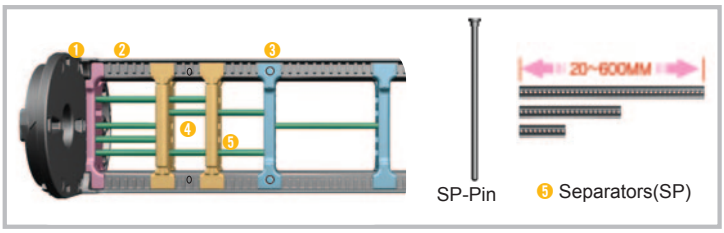

1 DV-S 2 DV-R 3 DV-M 4 DV-T

Solid Linear State by adopting 'BR'

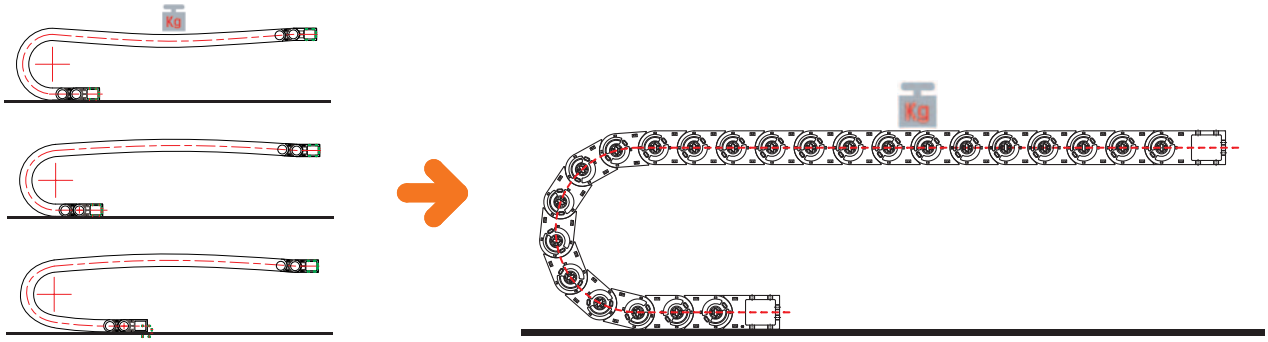

Easy Disassembly without tools

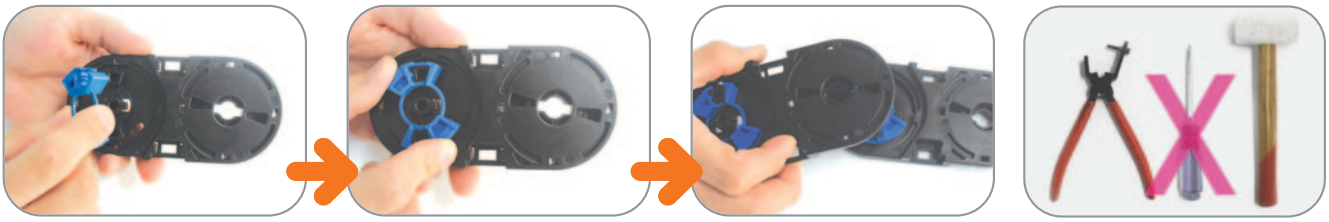

UV, EX, UV and RoHS Certification acquired

Shift Chain is made of High-Quality Engineering Plastic Material, which performs excellent durability and wear resistance, hence it reduces possibility of breakage by external damage, meanwhile performs stable cable protection in harsh circumstance.
As Cable Chain is verified its safeness against explosion possibility through ESD and ATEX qualification Test and it also can be installed at outside when UV retardant material applied. Shift Chain is Eco-Friendly products as it does not exceeds limited amount of 6 harmful substance such as Pb, Cd, Hg, Cr+6, PBB and PBDEs where European markets regulate strictly.

ESD EX UV RoHS

Installation Method of Cable Chain

Arrangement and Installation of cable

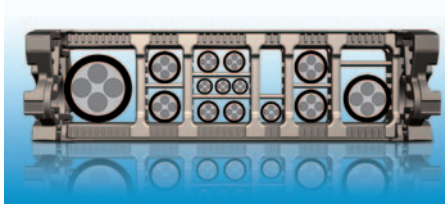

Available Space
Rounded Cable : 10% of space to be guaranteed based on Dia. of cable
Flat Cable : 10% of space to be guaranteed based on thickness of cable
Hose : 20% of space to be guaranteed based on Dia. of hose

10% of space should be secured between cables. When different dia. of cables are inserted, divider should be used. When there is 10% of space between cables, separator should be used.

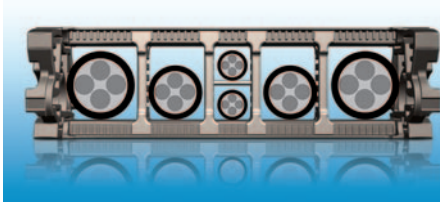

Single layer arrangement of cables are a standard. Big sized cables are placed outside and small sized cables are placed at center. Do not overlap cables but separate them by using separator.

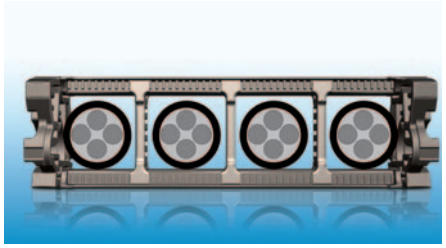

Cables should be placed straightly and arrange them to maintain balance of weight like in the image.

Bending Radius Value,"R"

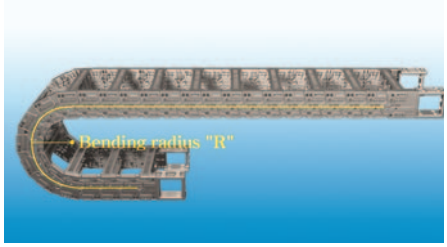

Minimum "R" Value of Cable :
Multiply 8 to 10 against the biggest cable
Minimum "R" Value of Hose :
Multiply 15 to 20 against the biggest hose

R value of Cable Chain should exceeds the R value of cable or hose.

Arrangement of Cable and Hose

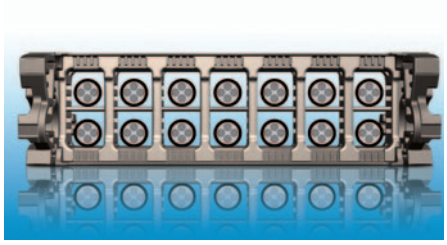

When sum of 2 cables are bigger than X1.2, Inner Height of Cable Chain, Divider does not to be installed. But when it does not exceed X1.2, Divider is recommended to be used.
In case of separator, when cable or hose' dia is lower than X0.5, separators is recommended to be used.

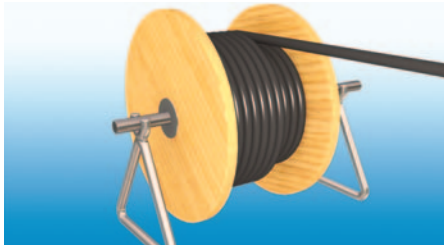

When cable is inserted inside of Cable Chain, its condition should be maintained straightly to prevent cable that to be entangled.

Arrangement of Cable and Hose

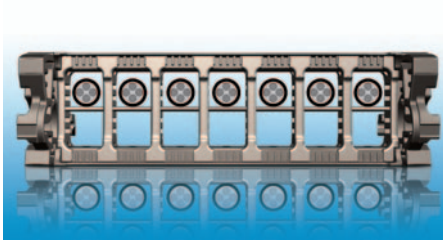

Cables should be placed the upper section when it designed one row arrangement

Normal Type

Shift Chain®

General Information

Material : CPS-Amide (PA6+G.F)
Speed : 6m/s
Acceleration : 12m/s²
Temperature : -30℃ ~ +130℃
Special production : ESD, UV
Certificate : CE, ATEX(Ex), RoHs2

Value of Speed/Acceleration is subject to change according to cable's amount and travel length.

Calculation Table

Length of Cable Chain

: L = ½ X Ls +Lp

Bending Radius

: Multiply 8~10 of the biggest cable

: Multiply 15~20 of the biggest hose

Bracket Type

ST072, 095, 120 and 150 use Steel Bracket; there are B1, B2 and B3 like the image below.

Free End Bracket (FEB)

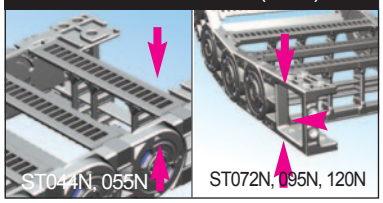

Steel End Bracket (SEB)

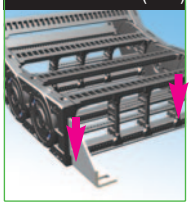

ST044, ST055, ST072, ST095, ST120

ST072, ST095, ST120, ST150

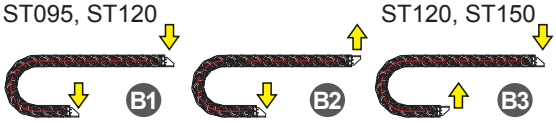

Free End Bracket (FEB)

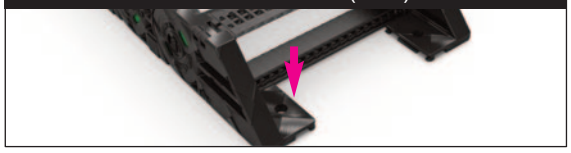

ST044N/ST055N use both FEB and EB type of bracket; there are B1, B2 and B3 like the image below.

Dimension Table

Shift Chain N Type	Pitch	Bending Radius (R)	Weight kg/m	Speed m/s	Temperature ℃	Size A	Size B	Size C	Size D	Frame Type	Section-Composition
ST044N	44	50, 70, 90, 120, 150	0.93 0.97 1.00 1.06 1.17 1.30 1.43 1.78 1.94	6	-30 ~+130	56 71 76 96 121 146 171 196 221	38	35 50 55 75 100 125 150 175 200	26		
ST055N	55	65, 75,100, 125, 150, 200	1.12 1.15 1.18 1.23 1.31 1.41 1.51 1.78 1.92	6	-30 ~+130	56 71 76 96 121 146 171 196 221	52	35 50 55 75 100 125 150 175 200	40		
ST072N	72	72, 100, 120, 145, 200, 250, 300	2.10 2.20 2.30 2.43 2.51 2.56 2.62 2.66 2.93 3.11 3.21 3.24 3.60	6	-30 ~+130	82 107 132 157 172 182 197 207 222 232 272 282 332	66	50 75 100 125 140 150 165 175 190 200 240 250 300	45		
ST095N	95	135, 150, 200, 230, 280, 400	3.11 3.17 3.37 3.49 3.60 3.71 3.79 3.95 4.00 4.05 4.31 4.69 5.05	6	-30 ~+130	113 138 163 188 213 228 238 268 278 288 338 388 438	82	75 100 125 150 175 190 200 230 240 250 300 350 400	56		
ST120N	120	180, 200, 250, 300, 350, 400, 500	4.41 4.53 4.61 4.67 4.78 4.93 5.17 5.41 5.47 5.80 5.88 6.30 6.73 7.07 7.30 8.13 8.30	6	-30 ~+130	117 142 157 167 192 217 242 282 292 332 342 392 442 492 542 592 642	108	75 100 115 125 150 175 200 240 250 290 300 350 400 450 500 550 600	78		
ST150N	150	205, 305, 405, 505, 605	5.85 5.96 6.03 6.08 6.18 6.30 6.51 6.72 6.78 7.06 7.14 7.51 7.88 8.18 8.37 9.11 9.26	6	-30 ~+130	121 146 161 171 196 221 246 286 296 336 346 396 446 496 546 596 646	140	75 100 115 125 150 175 200 240 250 290 300 350 400 450 500 550 600	110		

Ordering

ST | 044N. | 100. | R120 / F | 1500L : (DV:2)

- Quantity of Divider(Link)
- Length(mm)
- Bracket Type : **F**-Free End Bracket **FT**-Tie Wrap **FST**-System Tie Wrap **B1, B2, B3**-Possibly applied
- Bending radius
- Inside width
- Normal Type (N)
- Shift Chain

(Dimensions in mm)

Application of Shift Chain Normal type

Shift Chain can be applied on various industrial machinery and production lines

ST044N **Application :** Industrial Machinery
Country : Italy
Remark : Available various stroke and moving direction

ST120N **Application :** Robot carriage line
Country : China
Remark : 3M stroke application

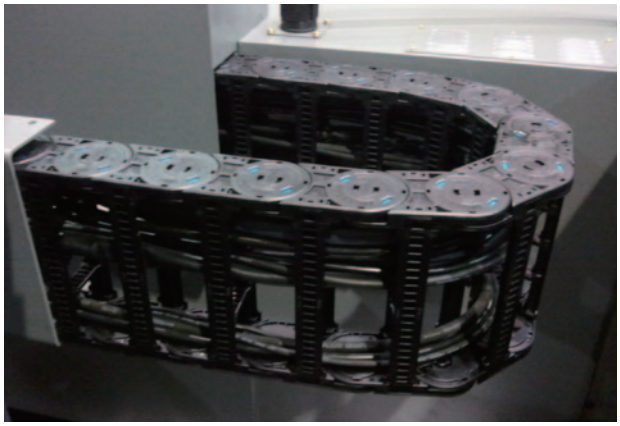

ST055N **Application :** Industrial Machinery
Country : Japan
Remark : Side moving application

ST095N
Application :
Production lin for steel products
Country : South Korea
Remark : Available various stroke and moving direction

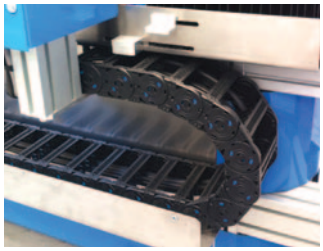

ST072N
Application : Cutting Macine
Country : Italy
Remark : 2.5 Stroke application

Customized Shift Chain

Shift Chain is designed to move to upper, lower and diagonal directions according to the machine movement. As using a different bending radius, you can create proper bending radius or the reverse beding radius for the direction you need, even available for zigzag movement for the machines Please contact CPS R&D Center for any special requests.

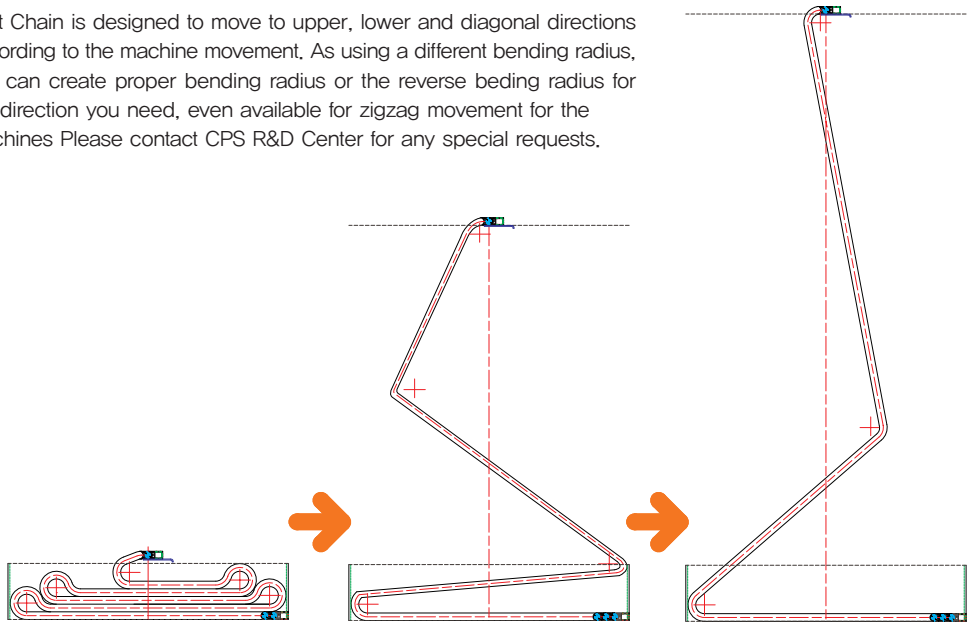

Part of Shift Chain-Normal Type

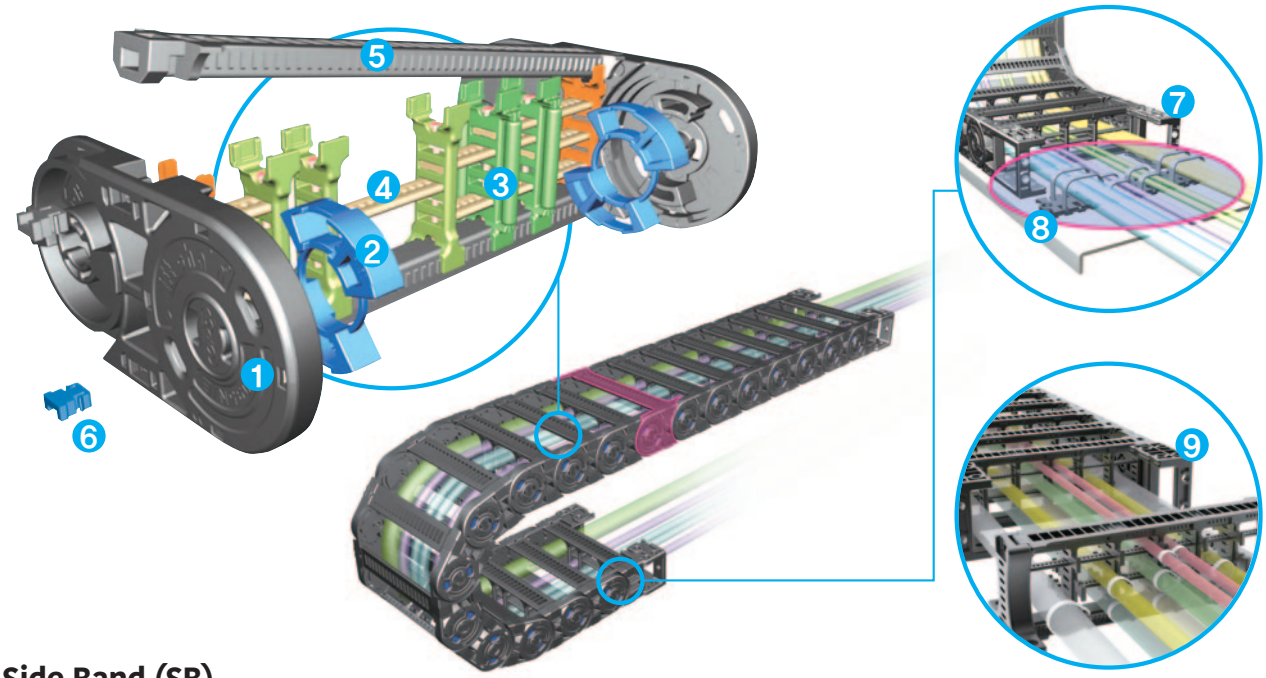

❶ Side Band (SB)

A part that connects upper and lower frame. There are LH and RH type.

❷ Bending Radius Unit (BR)

A part that is inserted into Side Band. It is one of units that helps Shift Chain's excellent Unsupported Length' performance.

❸ Divider (DV-S, M, R, T)

A part that prevents entanglement risk of cables and hoses by being installed vertically.

❹ Separator (SP)

A part that prevent entanglement risk of cable and hoses by being installed horizontally.

❺ Frame (Hinged Type) (FR)

A part that connects with LH, RH Side Band. There are every 5mm bumps that prevent dividers to be securely positioned at a place. One side of frame has a hinge structure that helps easy assembly and disassembly.

❻ Frame Pin (FP)

A part that is inserted into a hole formed at one side of Frame. It prevents Frame to not be separated after being assembled with Side Band.
*ST072N, 095N, 120N and 150N: Frame Pin is applied.
*ST044N, 055N: Frame Pin not applied, instead Hook structure was designed.

❼ Free End Bracket (FEB)

A part that connects to each end of Cable Chain. There are holes are formed where steel washers are inserted to fix FEB to fixing plate securely.

❽ Tie Wrap (TW)

A part that prevents damage of the cable and hose by twisting & pulling movements. It can be used as assembling with bracket or separating from the bracket at end position of chain.

❾ System Tie Wrap (STW)

A part that connects to first or end of Cable Chain. Cables and hoses are arranged at System Tie Wrap by several layers and being tightened using Cable Tie. There are 2 types. One is separated from FEB and the other one is assembled to FEB.

Assembly procedure of Shift Chain Normal Type

The assembling process of Shift Chain N-Type is like below and users must use rubber hammer with careful combination of Divider and Separator. Be careful of different assembling process depending on product specification such as ST044N, 055N Type, ST072N, 095N, 120N Type, ST150N Type etc.

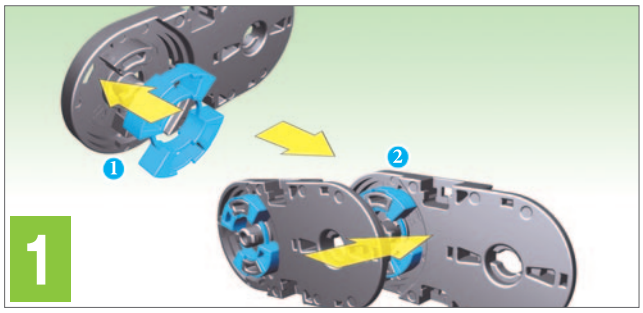

Insert BR unit to each side band, connect the side bands as many as you need, then do the same process to the other side of side band.

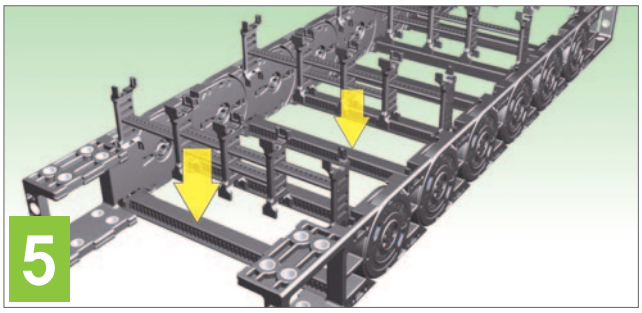

Fix the separator and divider patterns to the bottom-side frames as needed.

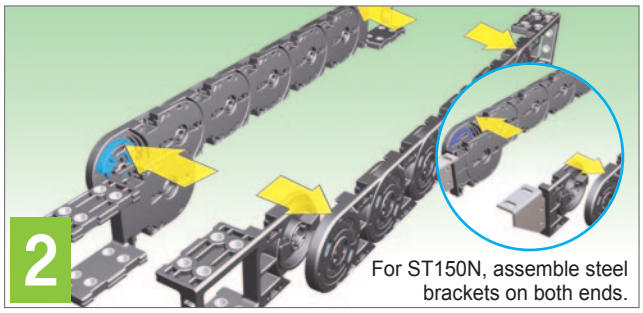

Assemble the end brackets on both ends using the same method.

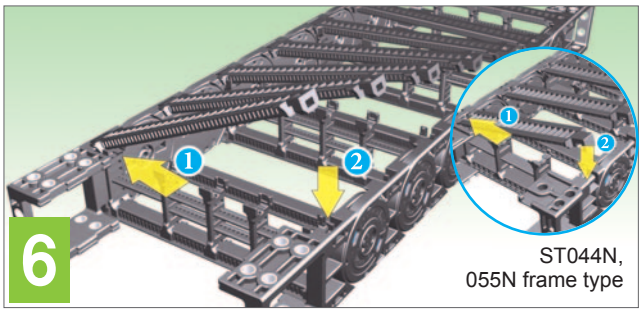

Attach frames to one side groove on the side band, and then the other side.

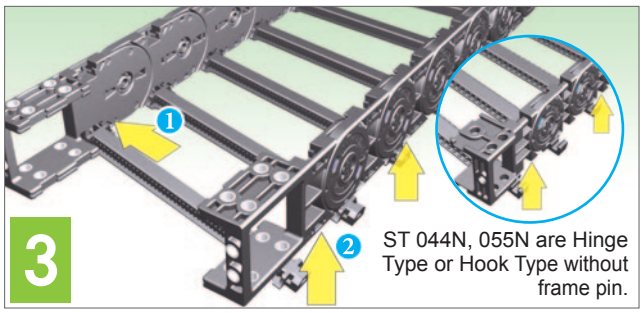

Attach frames to one side groove on the side band, and then the other side.

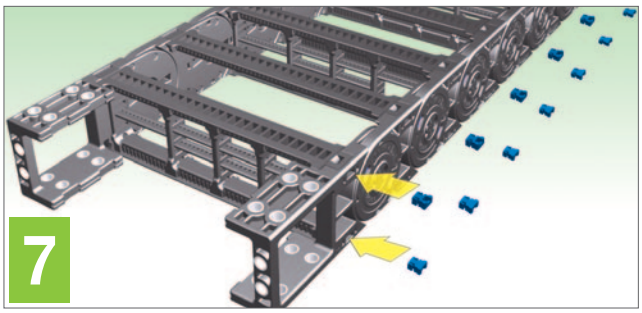

Insert frame pins to secure the frames and complete carrier. (ST072N, 095N, 120N, 150N are applied with frame pin, and ST044N, 055N are Hinge Type or Hook Type without frame pin.)

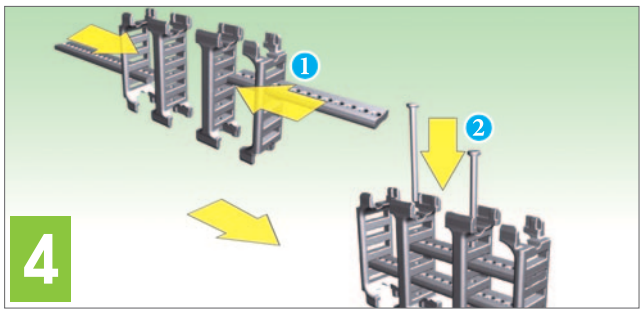

For ST072N, 095N,120N, and 150N, connect the pin of separator in hole of divider after inserting separator in hole of divider. For ST044N and ST055N, separator fixing pins are not used.

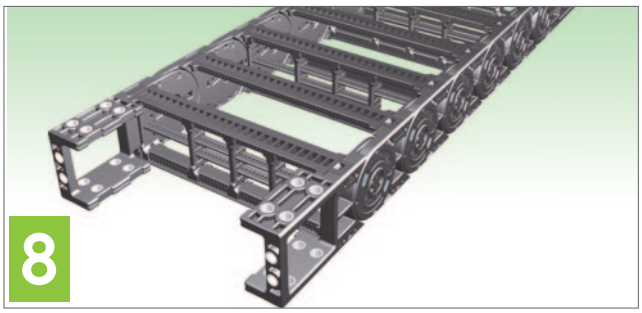

Assembly of Shift Chain N-Type is completed.

Part list of Shift Chain-Normal Type

Model	Classification	Part number	Description
ST044N	SIDE BAND	ST-SB044N/E(LH)	Left side band of ST044N
		ST-SB044N/E(RH)	Right side band of ST044N
	BENDING RADIUS	ST-BR044.R50,70,90,120,150	Bending radius unit for side band
	FRAME	sb-FR/M.35	Frame, 35mm
		sb-FR/M.50	Frame, 50mm
		sb-FR/M.55	Frame, 55mm
		sb-FR/M.75	Frame, 75mm
		sb-FR/M.100	Frame, 100mm
		sb-FR/M.125	Frame, 125mm
		sb-FR/M.150	Frame, 150mm
		sb-FR/M.175	Frame, 175mm
		sb-FR/M.200	Frame, 200mm
	BRACKET	ST-FEB044 / B1~B3	Free End bracket of ST044N, End bracket(B1, B2, B3)
	DIVIDER	sb-DV028/M	Normal divider
		sb-DV028/S	To fix separstors at the both side section
	SEPARATOR	S-SP/M.35	Separator, 35mm
		S-SP/M.50	Separator, 50mm
		S-SP/M.75	Separator, 75mm
		S-SP/M.100	Separator, 100mm
		S-SP/M.125	Separator, 125mm
		S-SP/M.150	Separator, 150mm
		S-SP/M.175	Separator, 175mm
		S-SP/M.200	Separator, 200mm
	TIE WRAP	S-TW036/025CR.35	Tie wrap for end bracket to fix cables, 35mm
		S-TW036/025CR.50	Tie wrap for end bracket to fix cables, 50mm
		S-TW036/025CR.55	Tie wrap for end bracket to fix cables, 55mm
		S-TW036/025CR.75	Tie wrap for end bracket to fix cables, 75mm
		S-TW036/025CR.100	Tie wrap for end bracket to fix cables, 100mm
		S-TW036/025CR.125	Tie wrap for end bracket to fix cables, 125mm
		S-TW036/025CR.150	Tie wrap for end bracket to fix cables, 150mm
	SYSTEM TIE WRAP	sb-DV028/W	Divider for fixing cables at end bracket
		S-TW.EB028	System tie wrap to arrange for cables right after moving bracket or fixing bracket
ST055N	SIDE BAND	ST–SB055N/E(LH)	Left side band of ST055N
		ST-SB055N/E(RH)	Right side band of ST055N
	BENDING RADIUS	ST-BR055.R65,75,100,125,150,200	Bending radius unit for side band
	FRAME	sb-FR/M.35	Frame, 35mm
		sb-FR/M.50	Frame, 50mm
		sb-FR/M.55	Frame, 55mm
		sb-FR/M.75	Frame, 75mm
		sb-FR/M.100	Frame, 100mm
		sb-FR/M.125	Frame, 125mm
		sb-FR/M.150	Frame, 150mm
		sb-FR/M.175	Frame, 175mm
		sb-FR/M.200	Frame, 200mm
	BRACKET	ST-FEB055 / B1~B3	Free End bracket of ST055N, End bracket(B1, B2, B3)
	DIVIDER	sb-DV035/M	Normal divider
		sb-DV035/S	To fix separstors at the both side section
	SEPARATOR	S-SP/M.35	Separator, 35mm
		S-SP/M.50	Separator, 50mm
		S-SP/M.55	Separator, 55mm
		S-SP/M.75	Separator, 75mm
		S-SP/M.100	Separator, 100mm
		S-SP/M.125	Separator, 125mm
		S-SP/M.150	Separator, 150mm
		S-SP/M.175	Separator, 175mm
		S-SP/M.200	Separator, 200mm
	TIE WRAP	S-TW050/035N.50	Tie wrap for end bracket to fix cables, 50mm
		S-TW050/035N.75	Tie wrap for end bracket to fix cables, 75mm
		S-TW050/035N.100	Tie wrap for end bracket to fix cables, 100mm
		S-TW050/035N.125	Tie wrap for end bracket to fix cables, 125mm
		S-TW050/035N.150	Tie wrap for end bracket to fix cables, 150mm
		S-TW050/035N.175	Tie wrap for end bracket to fix cables, 175mm
		S-TW050/035N.200	Tie wrap for end bracket to fix cables, 200mm
	SYSTEM TIE WRAP	sb–DV035/W	Divider for fixing cables at end bracket
		S–TW.EB035	System tie wrap to arrange for cables right after moving bracket or fixing bracket
ST072N	SIDE BAND	ST-SB072N/E(LH)	Left side band of ST072N
		ST-SB072N/E(RH)	Right side band of ST072N
	BENDING RADIUS	ST–BR072.R72,100,120,145,200,250,300	Bending radius unit for side band
		S-FP/S1	Frame pin
	FRAME	sb-FR045.50	Frame, 50mm
		sb-FR045.75	Frame, 75mm
		sb-FR045.100	Frame, 100mm
		sb-FR045.125	Frame, 125mm
		sb-FR045.140	Frame, 140mm
		sb-FR045.150	Frame, 150mm
		sb-FR045.165	Frame, 165mm
		sb-FR045.175	Frame, 175mm
		sb-FR045.190	Frame, 190mm
		sb-FR045.200	Frame, 200mm
		sb-FR045.240	Frame, 240mm
		sb-FR045.250	Frame, 250mm
		sb-FR045.300	Frame, 300mm
	BRACKET	ST-FEB072 / B1~B3	End bracket of ST072N
		sb-FEB/WH045	Steel washer for end bracket
	DIVIDER	sb-DV045/M	Normal divider
		sb-DV045/S	To fix separstors at the both side section
		sb-DV045/T	T divider
		sb-DV045/TP	T divider pin
	SEPARATOR	sb-SP/400.Frame	Separator, 400mm
		SP–PIN045	Separator pin to fix
	TIE WRAP	S-TW50	Tie wrap for end bracket to fix cables, 50mm
		S-TW75	Tie wrap for end bracket to fix cables, 75mm
		S-TW100	Tie wrap for end bracket to fix cables, 100mm
		S-TW125	Tie wrap for end bracket to fix cables, 125mm
		S-TW150	Tie wrap for end bracket to fix cables, 150mm
	SYSTEM TIE WRAP	sb–DV045/W	Divider for fixing cables at end bracket
		S–TW.EB045	System tie wrap to arrange for cables right after moving bracket or fixing bracket

Model	Classification	Part number	Description
ST095N	SIDE BAND	ST-SB095N/E(LH)	Left side band of ST095N
		ST-SB095N/E(RH)	Right side band of ST095N
	BENDING RADIUS	ST-BR095.R135,150,200,230,280,400	Bending radius unit for side band
	FRAME PIN	S-FP/S1	Frame Pin
	FRAME	sb-FR060.75	Frame, 75mm
		sb-FR060.100	Frame, 100mm
		sb-FR060.125	Frame, 125mm
		sb-FR060.150	Frame, 150mm
		sb-FR060.175	Frame, 175mm
		sb-FR060.190	Frame, 190mm
		sb-FR060.200	Frame, 200mm
		sb-FR060.230	Frame, 230mm
		sb-FR060.240	Frame, 240mm
		sb-FR060.250	Frame, 250mm
		sb-FR060.300	Frame, 300mm
		sb-FR060.350	Frame, 350mm
		sb-FR060.400	Frame, 400mm
	BRACKET	ST-FEB095 / B1~B3	Free End bracket of ST095N, Steel End bracket(B1, B2, B3)
		sb-FEB/WH060	Steel washer
	DIVIDER	sb-DV060/M	Normal divider
		sb-DV060/S	To fix separstors at the both side section
		sb-DV060/T	T divider
		sb-DV060/TP	T divider pin
	SEPARATOR	sb-SP/400.Frame	Separator, 400mm
		SP-PIN060	Separator pin to fix
	TIE WRAP	S-TW50	Tie wrap for end bracket to fix cables, 50mm
		S-TW75	Tie wrap for end bracket to fix cables, 75mm
		S-TW100	Tie wrap for end bracket to fix cables, 100mm
		S-TW125	Tie wrap for end bracket to fix cables, 125mm
		S-TW150	Tie wrap for end bracket to fix cables, 150mm
	SYSTEM TIE WRAP	sb-DV060/W	Divider for fixing cables at end bracket
		S-TW.EB060	System tie wrap to arrange for cables right after moving bracket or fixing bracket
ST120N	SIDE BAND	ST-SB120N/E(LH)	Left side band of ST120N
		ST-SB120N/E(RH)	Right side band of ST120N
	BENDING RADIUS	ST-BR120.R180,200,250, 300,350,400,500	Bending radius unit for side band
	FRAME PIN	S-FP/S2	Frame Pin
	FRAME	sb-FR075/100.75	Frame, 75mm
		sb-FR075/100.100	Frame, 100mm
		sb-FR075/100.115	Frame, 115mm
		sb-FR075/100.125	Frame, 125mm
		sb-FR075/100.150	Frame, 150mm
		sb-FR075/100.175	Frame, 175mm
		sb-FR075/100.200	Frame, 200mm
		sb-FR075/100.240	Frame, 240mm
		sb-FR075/100.250	Frame, 250mm
		sb-FR075/100.290	Frame, 290mm
		sb-FR075/100.300	Frame, 300mm
		sb-FR075/100.350	Frame, 350mm
		sb-FR075/100.400	Frame, 400mm
		sb-FR075/100.450	Frame, 450mm
		sb-FR075/100.500	Frame, 500mm
		sb-FR075/100.550	Frame, 550mm
		sb-FR075/100.600	Frame, 600mm
	BRACKET	ST-FEB120 / B1~B3	Fres End bracket of ST120N, Steel End bracket(B1, B2, B3)
		sb-FEB/WH075	Steel washer
	DIVIDER	sb-DV075/M	Normal divider
		sb-DV075/S	To fix separstors at the both side section
		sb-DV075/T	T divider
		sb-DV075/TP	T divider pin
	SEPARATOR	sb-SP/400.Frame	Separator, 400mm
		SP-PIN075	Separator pin to fix
	TIE WRAP	S-TW50	Tie wrap for end bracket to fix cables, 50mm
		S-TW75	Tie wrap for end bracket to fix cables, 75mm
		S-TW100	Tie wrap for end bracket to fix cables, 100mm
		S-TW125	Tie wrap for end bracket to fix cables, 125mm
		S-TW150	Tie wrap for end bracket to fix cables, 150mm
	SYSTEM TIE WRAP	sb-DV075/W	Divider for fixing cables at end bracket
		S-TW.EB075	System tie wrap to arrange for cables right after moving bracket or fixing bracket
ST150N	SIDE BAND	ST-SB150N/E(LH)	Left side band of ST150N
		ST-SB150N/E(RH)	Right side band of ST150N
	BENDING RADIUS	ST-BR150.R205,305,405,505,605	Bending radius unit for side band
	FRAME PIN	S-FP/S2	Frame Pin
	FRAME	sb-FR075/100.75	Frame, 75mm
		sb-FR075/100.100	Frame, 100mm
		sb-FR075/100.115	Frame, 115mm
		sb-FR075/100.125	Frame, 125mm
		sb-FR075/100.150	Frame, 150mm
		sb-FR075/100.175	Frame, 175mm
		sb-FR075/100.200	Frame, 200mm
		sb-FR075/100.240	Frame, 240mm
		sb-FR075/100.250	Frame, 250mm
		sb-FR075/100.290	Frame, 290mm
		sb-FR075/100.300	Frame, 300mm
		sb-FR075/100.350	Frame, 350mm
		sb-FR075/100.400	Frame, 400mm
		sb-FR075/100.450	Frame, 450mm
		sb-FR075/100.500	Frame, 500mm
		sb-FR075/100.550	Frame, 550mm
		sb-FR075/100.600	Frame, 600mm
	STEEL END BRACKET	ST-SEB150 / B1~B3	Steel end bracket of ST150N (B1, B2, B3)
	DIVIDER	sb-DV100/M	Normal divider
		sb-DV100/S	To fix separstors at the both side section
		sb-DV100/T	T divider
		sb-DV100/TP	T divider pin
	SEPARATOR	sb-SP/600.Frame	Separator, 600mm
		SP-PIN100	Separator pin to fix
	TIE WRAP	S-TW50	Tie wrap for end bracket to fix cables, 50mm
		S-TW75	Tie wrap for end bracket to fix cables, 75mm
		S-TW100	Tie wrap for end bracket to fix cables, 100mm
		S-TW125	Tie wrap for end bracket to fix cables, 125mm
		S-TW150	Tie wrap for end bracket to fix cables, 150mm

ST044N

Shift Chain®

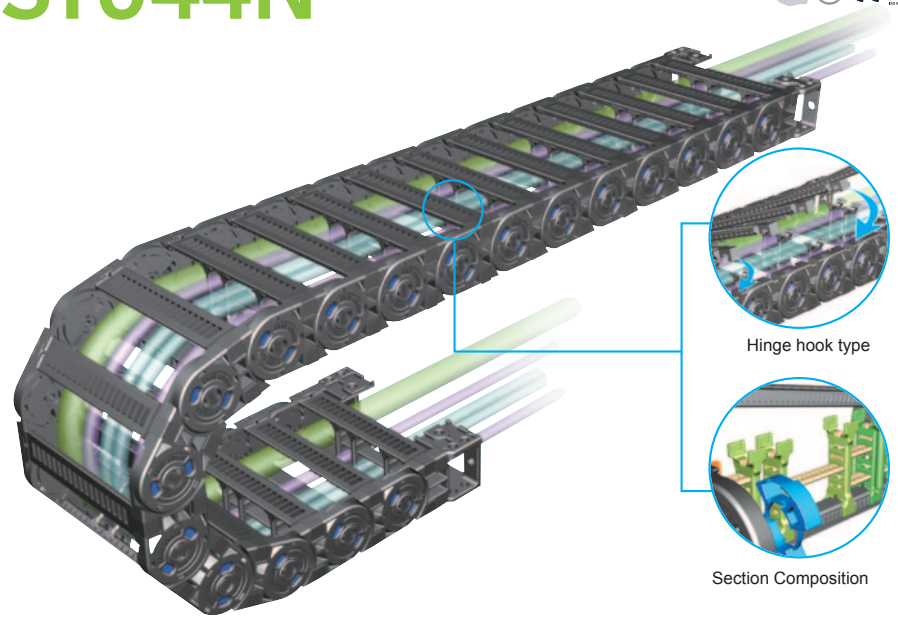

Hinge hook type

Section Composition

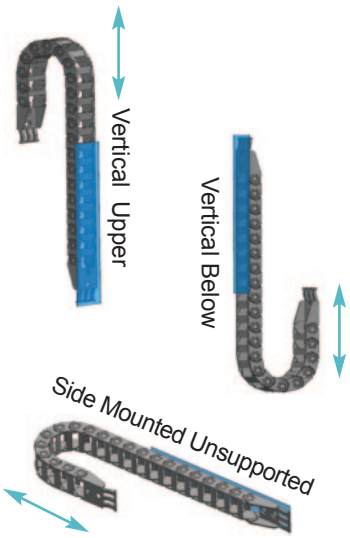

Ordering

ST 044N.100 R120/F –1540L : (DV:2)

- ST — Shift Chain
- 044N — Normal Type(N)
- 100 — Inside Width
- R120 — Bending Radius
- F — Bracket Type
- 1540L — Length (mm)
- (DV:2) — Quantity of Divider (Link)

Caculation of the Chain Length

$$[\quad L = \frac{Ls}{2} + Lp \quad]$$

Other Length Restrictions

Vertical Standing(Max)	= 2.0m
Vertical Hanging(Max)	= 40.0m
Side Mounted Unsupported(Max)	= 1.0m

Layout of the Chain

Ls: Stroke Hs: Safe Space

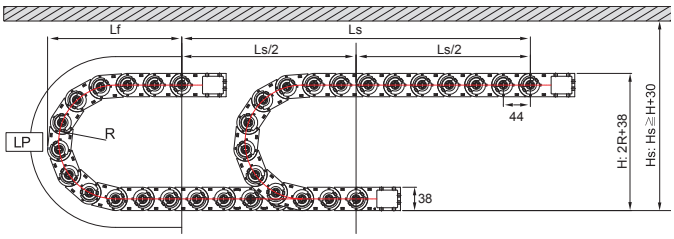

Bending Radius(R)	Lp(Loop Length)	LF(Loof Projection)	H(Moving Height)
50	334	157	138
70	396	177	178
90	459	197	218
120	553	227	278
150	648	257	338

Unsupported Length

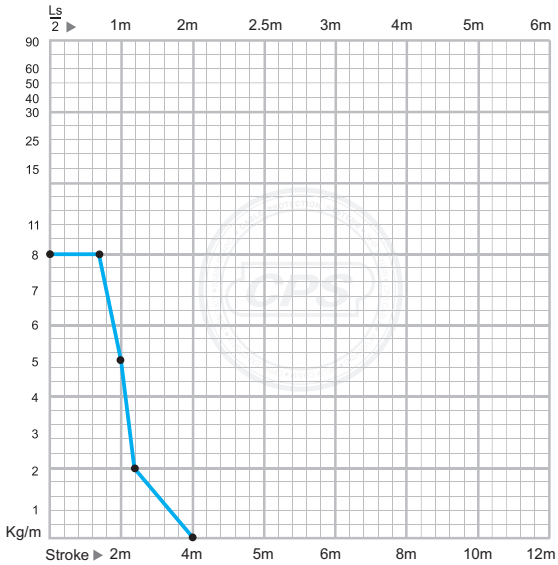

Chain Cross Section

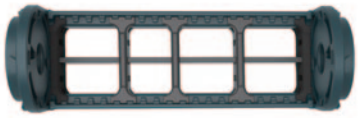

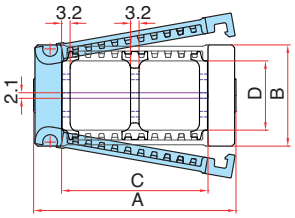

Chain Type	A Width (Outer)	B Height(Outer)	C Frame/Width(Inner)	D Height (Inner)	Weight kg/m
ST044N	56	38	35	26	0.93
	71		50		0.97
	76		55		1.00
	96		75		1.06
	121		100		1.17
	146		125		1.30
	171		150		1.43
	196		175		1.78
	221		200		1.94

(Dimensions in mm)

ST044N

Dividers (DV)

Assemble divider every second frame
DV/T Applied to Frame 125~200
DV/M Normal Divider
DV/W
Tie wrap divider for free end bracket(FEB)

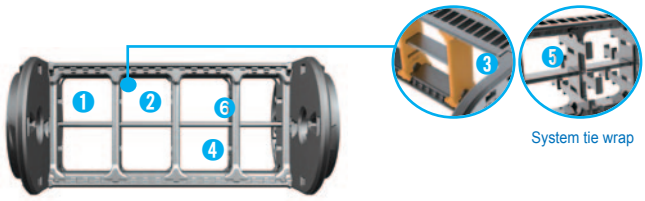

❶ sb-DV028/S

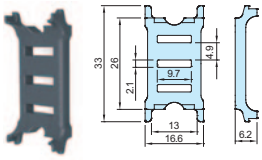

❷ sb-DV028/M1

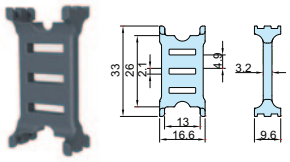

❸ sb-DV028/M2

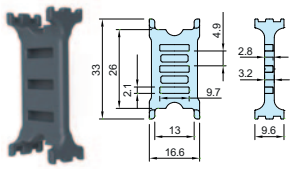

❹ sb-DV028/T

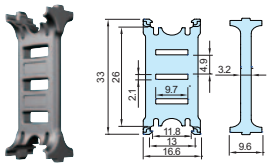

❺ sb-DV028/W

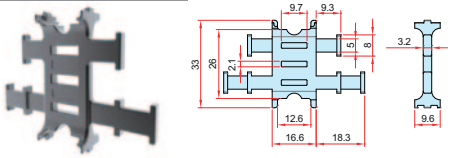

Free End Bracket (FEB)

Moving End

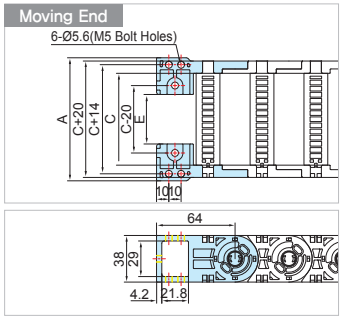

Fixing End

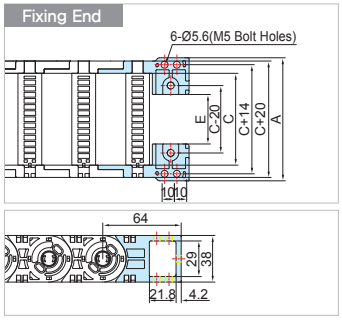

Front point

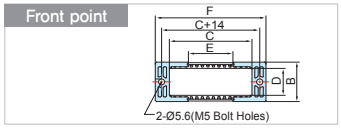

End Bracket (EB)

Fixing End

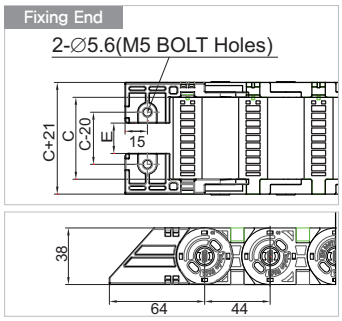

Moving End

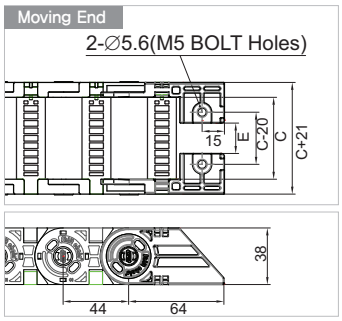

Chain Type	A Width (Outer)	B Height (Outer)	C Frame Width	D Height (Inner)	E EB internal width	Hole Type
ST044N	60.4 75.4 80.4 100.4 125.4 150.4 175.4 200.4 225.4	38	35 50 55 75 100 125 150 175 200	26	0.4 15.4 20.4 40.4 65.4 90.4 115.4 140.4 165.4	M5 Bolt Holes

Separators (SP)

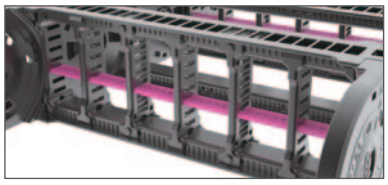

❺ Adjustable Separator length

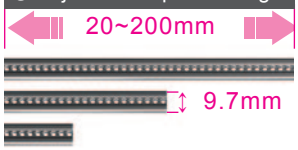

Chain Type	Ordering No.	Frame
ST044N	S-SP/M.35 S-SP/M.50 S-SP/M.55 S-SP/M.75 S-SP/M.100 S-SP/M.125 S-SP/M.150 S-SP/M.175 S-SP/M.200	35 50 55 75 100 125 150 175 200

System Tie Wrap (STW)

Front View

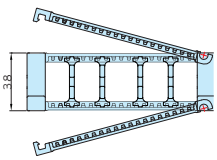

Top View

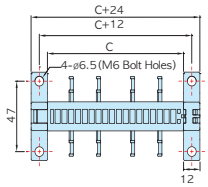

Side View

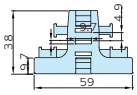

Chain Type	Ordering No.	C Frame	Hole Type
ST044N	S-TW.EB028.35 S-TW.EB028.50 S-TW.EB028.55 S-TW.EB028.75 S-TW.EB028.100 S-TW.EB028.125 S-TW.EB028.150 S-TW.EB028.175 S-TW.EB028.200	35 50 55 75 100 125 150 175 200	M6 Bolt Holes

Tie Wrap (TW)

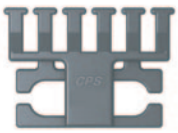

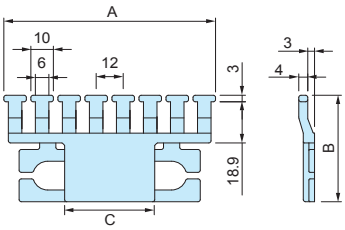

Chain Type	Ordering No.	A	B	C
ST044N	S-TW036/025CR.35 S-TW036/025CR.50 S-TW036/025CR.55 S-TW036/025CR.75 S-TW036/025CR.100 S-TW036/025CR.125 S-TW036/025CR.150	46 69 70 94 118 142 166	35.4 48.9 48.9 48.9 48.9 48.9 49.0	- 15 20 40 65 90 115

ST055N

Shift Chain®

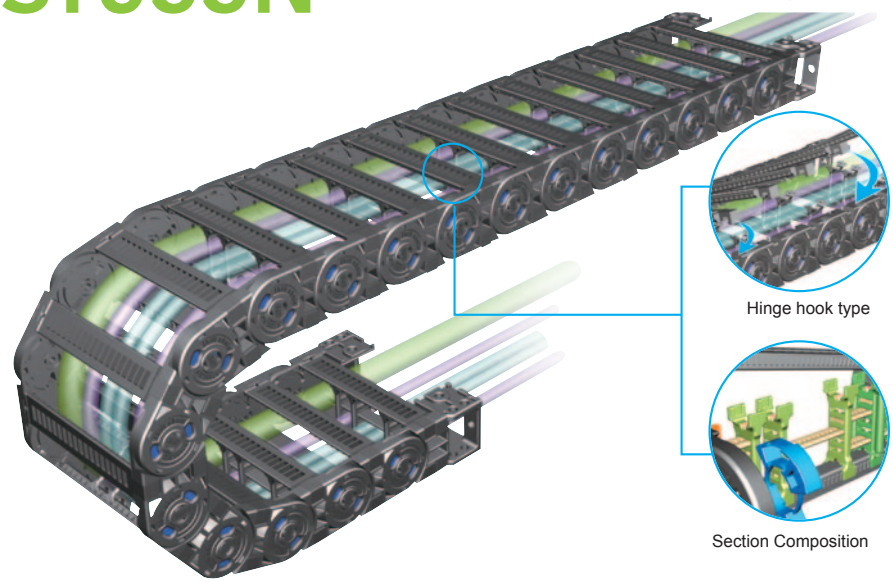

Hinge hook type

Section Composition

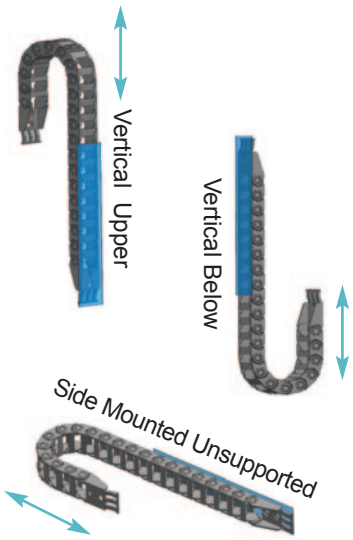

Ordering

ST 055N. 100. R125/F –1650L : (DV:2)

- ST 055N: Shift Chain
- 100: Inside Width
- R125/F: Bending Radius; Bracket Type
- 1650L: Length (mm)
- (DV:2): Quantity of Divider (Link)

Normal Type(N)

Caculation of the Chain Length

$$[\quad L = \frac{Ls}{2} + Lp \quad]$$

Other Length Restrictions

Vertical Standing(Max)	= 3.0m
Vertical Hanging(Max)	= 50.0m
Side Mounted Unsupported(Max)	= 1.0m

Layout of the Chain

Ls: Stroke Hs: Safe Space

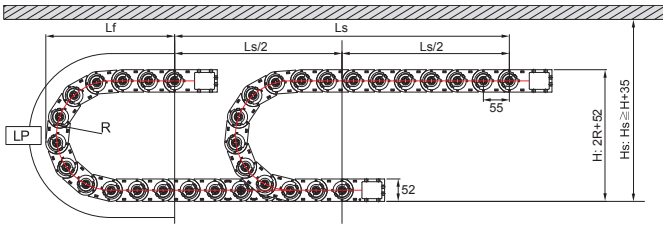

Bending Radius(R)	Lp(Loop Length)	LF(Loof Projection)	H(Moving Height)
65	425	201	182
75	456	211	202
100	535	236	252
125	613	261	302
150	692	286	352
200	849	336	452

Unsupported Length

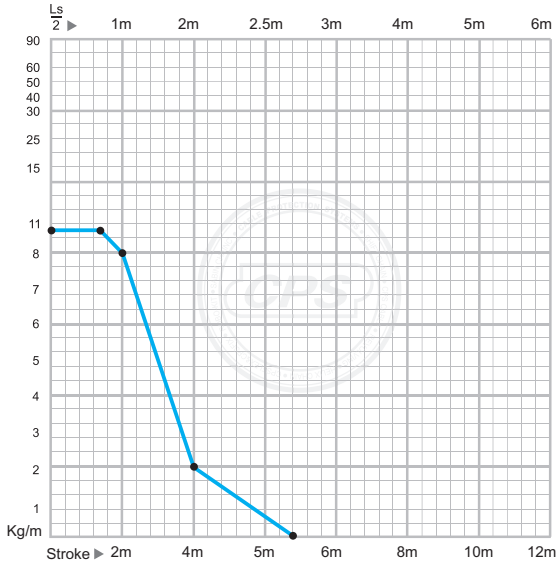

Chain Cross Section

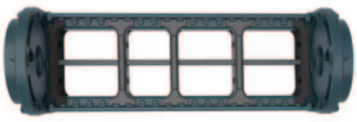

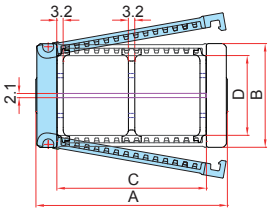

Chain Type	A Width (Outer)	B Height(Outer)	C Frame/Width(Inner)	D Height (Inner)	Weight kg/m
ST055N	56	52	35	40	1.12
	71		50		1.15
	76		55		1.18
	96		75		1.23
	121		100		1.31
	146		125		1.41
	171		150		1.51
	196		175		1.78
	221		200		1.92

(Dimensions in mm)

ST055N

Dividers (DV)

Assemble divider every second frame
DV/T Applied to Frame 125~200
DV/M Normal Divider
DV/W
Tie wrap divider for free end bracket(FEB)

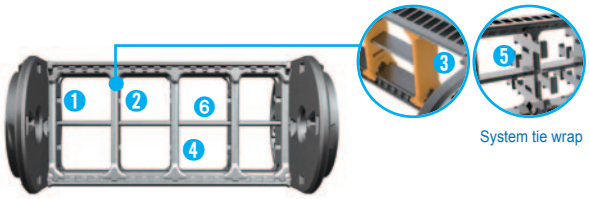

Free End Bracket (FEB)

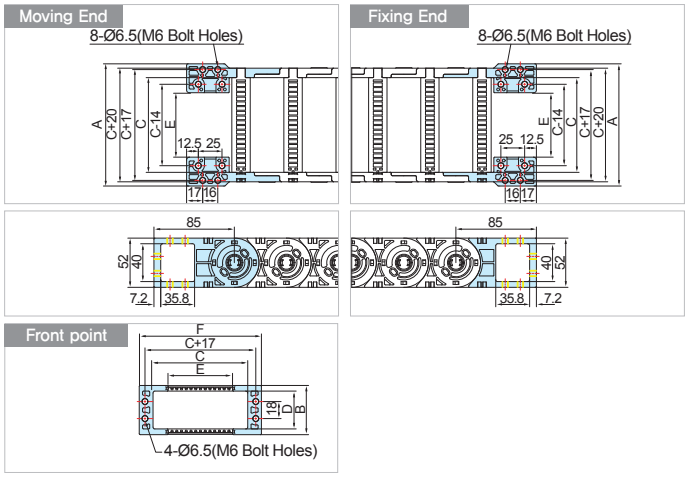

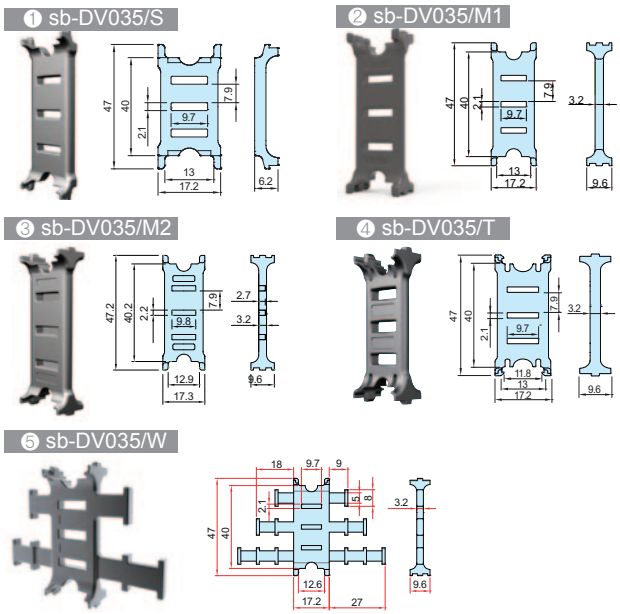

End Bracket (EB)

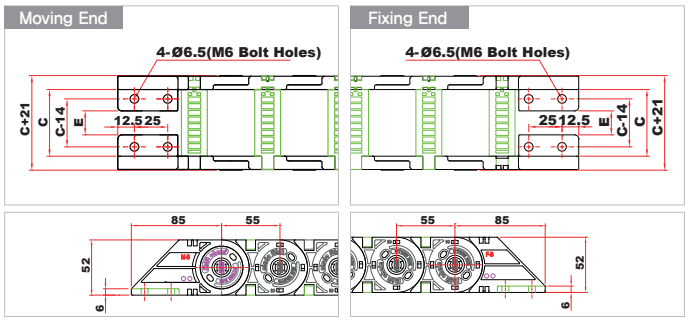

Chain Type	A Width (Outer)	B Height (Outer)	C Frame Width	D Height (Inner)	E EB internal width	Hole Type
ST055N	64 79 84 104 129 154 179 204 229	52	35 50 55 75 100 125 150 175 200	40	3 18 23 43 68 93 118 143 168	M6 Bolt Holes

Separators (SP)

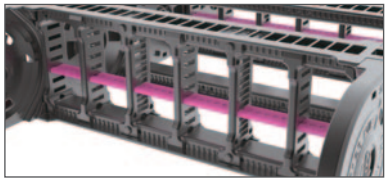

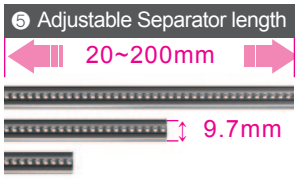

Chain Type	Ordering No.	Frame
ST055N	S-SP/M.35 S-SP/M.50 S-SP/M.55 S-SP/M.75 S-SP/M.100 S-SP/M.125 S-SP/M.150 S-SP/M.175 S-SP/M.200	35 50 55 75 100 125 150 175 200

System Tie Wrap (STW)

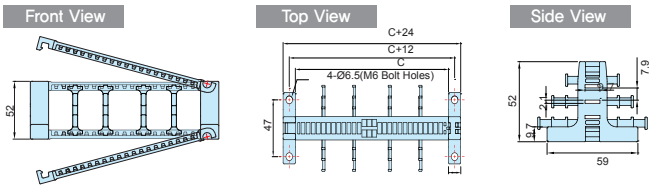

Chain Type	Ordering No.	C Frame	Hole Type
ST055N	S-TW.EB035.35 S-TW.EB035.50 S-TW.EB035.55 S-TW.EB035.75 S-TW.EB035.100 S-TW.EB035.125 S-TW.EB035.150 S-TW.EB035.175 S-TW.EB035.200	35 50 55 75 100 125 150 175 200	M6 Bolt Holes

Tie Wrap (TW)

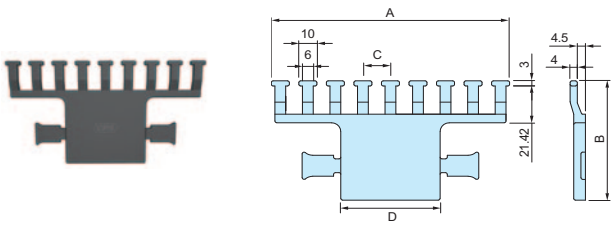

Chain Type	Ordering No.	A	B	C	D
ST055N	S-TW050/035N.50 S-TW050/035N.55 S-TW050/035N.75 S-TW050/035N.100 S-TW050/035N.125 S-TW050/035N.150 S-TW050/035N.175 S-TW050/035N.200	82 82 107 132 157 182 207 232	64.5	12.00 12.00 12.13 15.25 14.70 14.35 12.31 13.88	5 10 30 55 80 105 130 155

ST072N

Shift Chain®

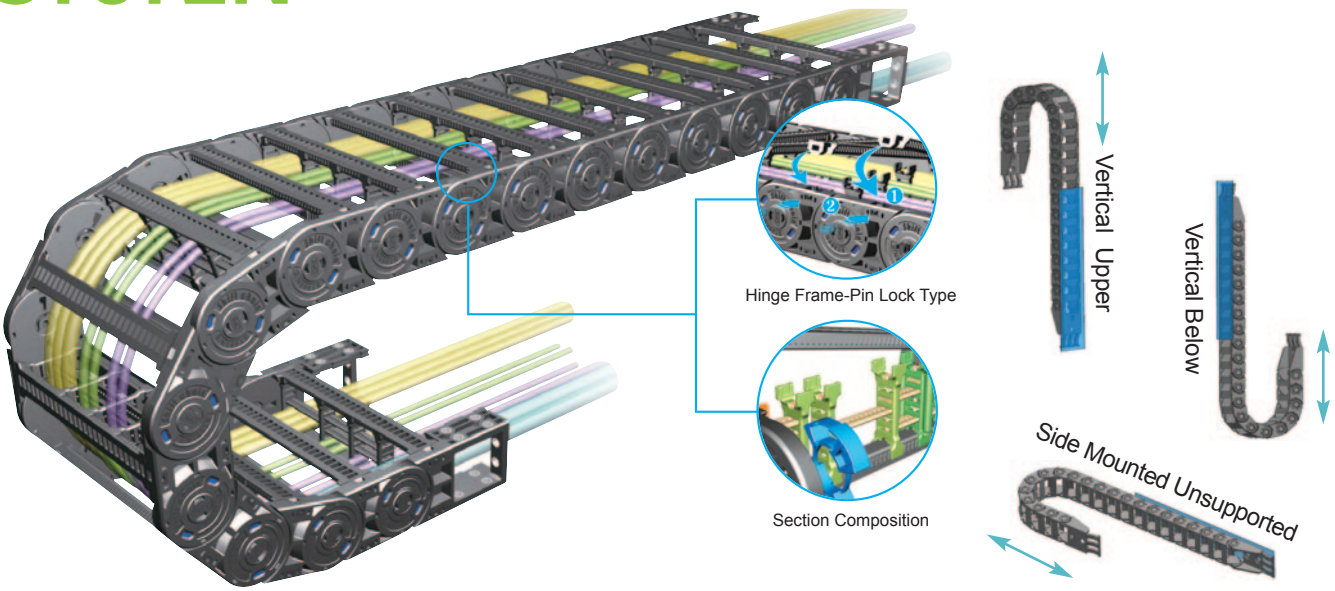

Ordering

ST072N. 150. R120/ F – 2520L : (DV:2)

- ST072N: Shift Chain (Normal Type(N))
- 150: Inside Width
- R120: Bending Radius
- F: Bracket Type
- 2520L: Length (mm)
- (DV:2): Quantity of Divider (Link)

Caculation of the Chain Length

$$L = \frac{Ls}{2} + Lp$$

Other Length Restrictions

Vertical Standing(Max)	= 6.0m
Vertical Hanging(Max)	= 100.0m
Side Mounted Unsupported(Max)	= 2.5m

Layout of the Chain

Ls: Stroke Hs: Safe Space

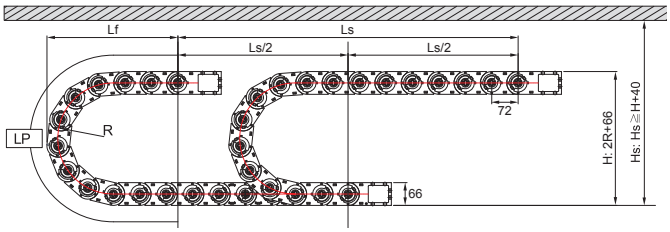

Bending Radius(R)	Lp(Loop Length)	LF(Loof Projection)	H(Moving Height)
72	515	249	210
100	603	277	266
120	665	297	306
145	744	322	356
200	917	377	466
250	1,074	427	566
300	1,231	477	666

Unsupported Length

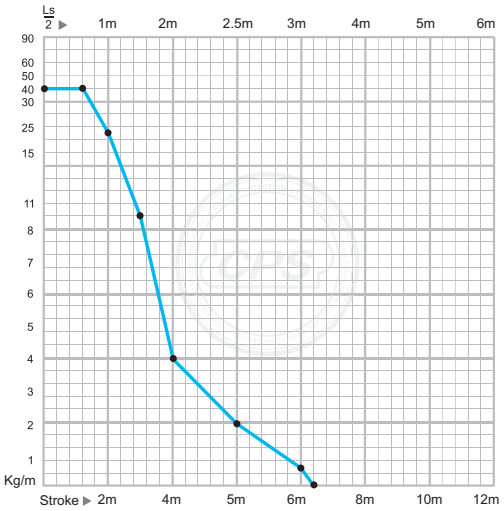

Chain Cross Section

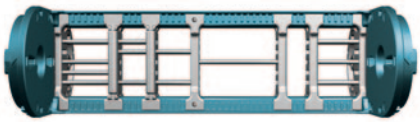

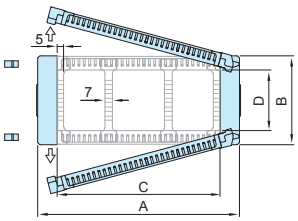

Chain Type	A Width (Outer)	B Height(Outer)	C Frame/Width(Inner)	D Height (Inner)	Weight kg/m
ST072N	82	66	50	45	2.10
	107		75		2.20
	132		100		2.30
	157		125		2.43
	172		140		2.51
	182		150		2.56
	197		165		2.62
	207		175		2.66
	222		190		2.93
	232		200		3.11
	272		240		3.21
	282		250		3.24
	332		300		3.60

(Dimensions in mm) CPS CP SYSTEM CO.,LTD. www.cpsystem.co.kr

ST072N

Steel End Bracket (SEB)

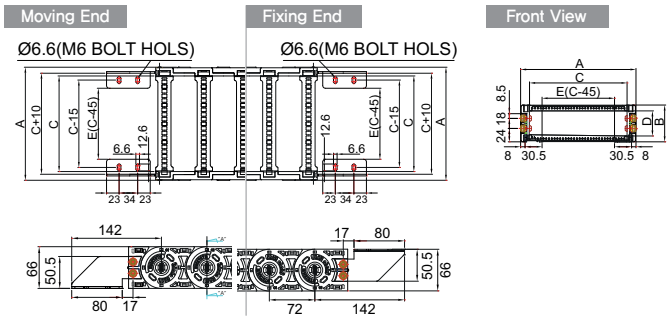

Separators (SP)

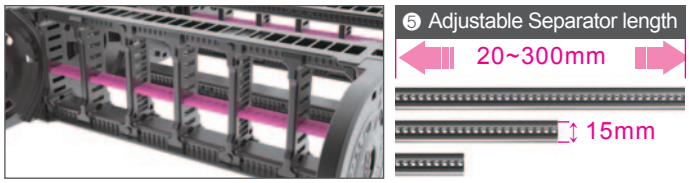

Chain Type	Ordering No.
ST072N	sb-SP/400.Frame

Free End Bracket (FEB)

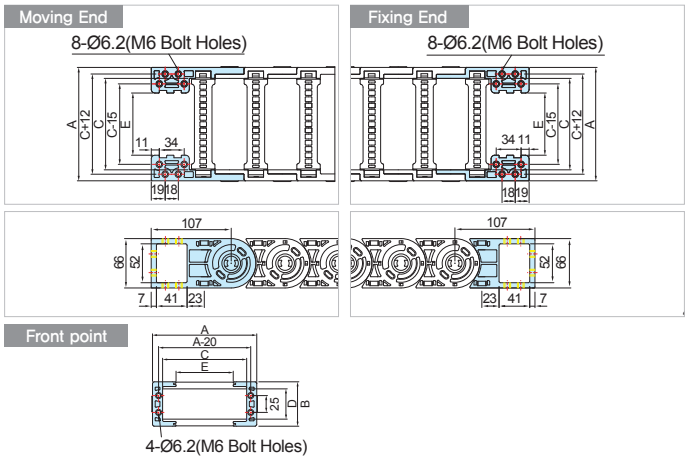

System Tie Wrap (STW)

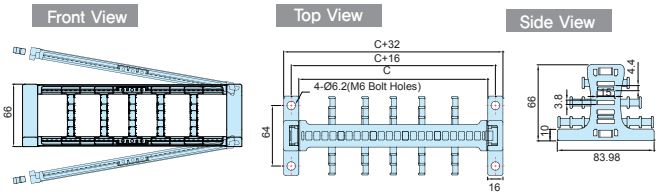

Tie Wrap (TW)

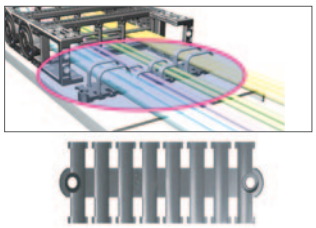

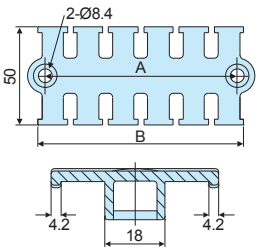

Dividers (DV)

Assemble divider every second frame
DV/T Applied to Frame 200~300
DV/M Normal Divider
DV/W Tie wrap divider for free end bracket(FEB)

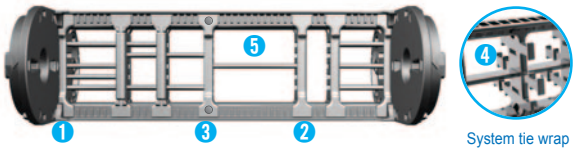

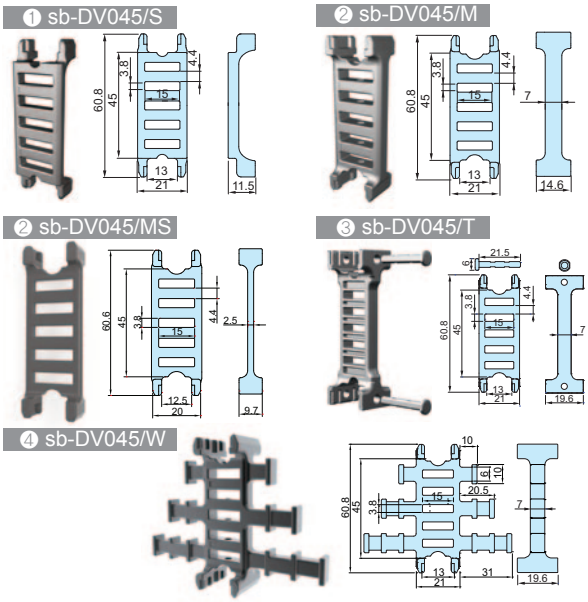

Chain Type	A Width (Outer)	B Height (Outer)	C Frame Width	D Height (Inner)	E EB internal width	Hole Type
ST072N	82	66	50	45	10	M6 Bolt Holes
	107		75		35	
	132		100		60	
	157		125		85	
	172		140		100	
	182		150		110	
	197		165		125	
	207		175		135	
	222		190		150	
	232		200		160	
	272		240		200	
	282		250		210	
	332		300		260	

Chain Type	Ordering No.	C Frame	Hole Type
ST072N	S-TW.EB045.50	50	M6 Bolt Holes
	S-TW.EB045.75	75	
	S-TW.EB045.100	100	
	S-TW.EB045.125	125	
	S-TW.EB045.140	140	
	S-TW.EB045.150	150	
	S-TW.EB045.165	165	
	S-TW.EB045.175	175	
	S-TW.EB045.190	190	
	S-TW.EB045.200	200	
	S-TW.EB045.240	240	
	S-TW.EB045.250	250	
	S-TW.EB045.300	300	

Chain Type	Ordering No.	A	B
ST072N	S-TW50	58	65
	S-TW75	75	82
	S-TW100	98	105
	S-TW125	122	129
	S-TW150	141	148

ST095N

Shift Chain®

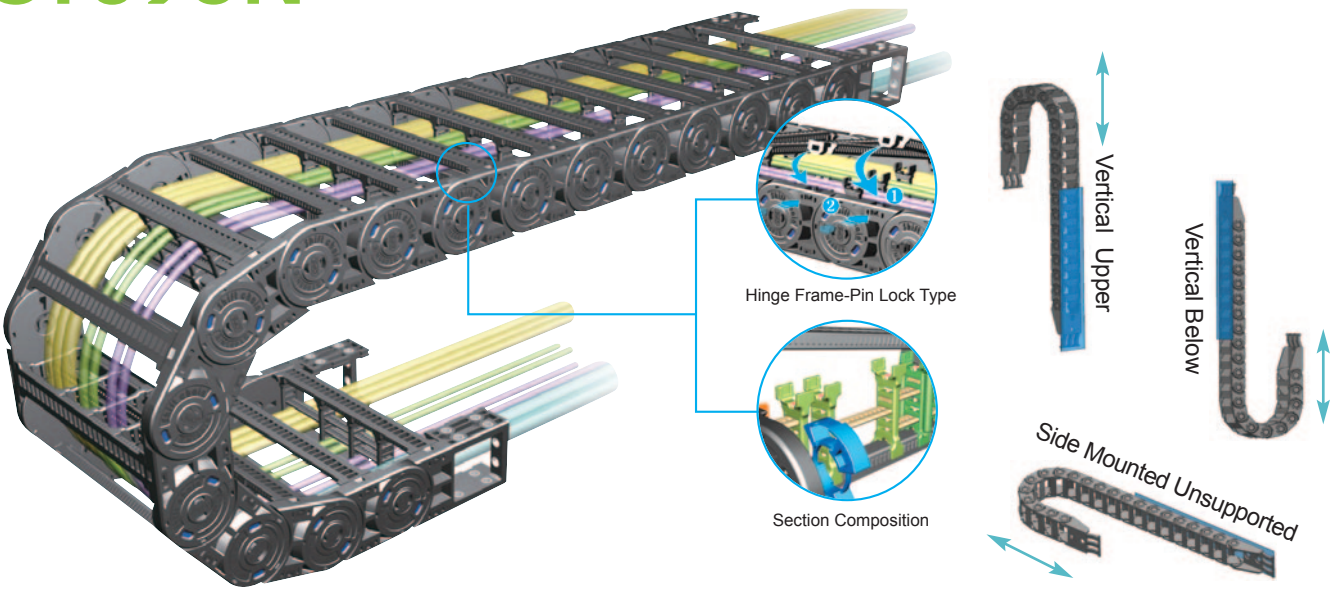

Ordering

ST 095N. 100. R135/F –3040L : (DV:2)

- ST: Shift Chain
- 095N: Normal Type(N)
- 100: Inside Width
- R135: Bending Radius
- F: Bracket Type :B1,B2,B3
- 3040L: Length (mm)
- (DV:2): Quantity of Divider (Link)

Caculation of the Chain Length

$$[\quad L = \frac{Ls}{2} + Lp \quad]$$

Other Length Restrictions

Vertical Standing(Max)	= 6.0m
Vertical Hanging(Max)	= 100.0m
Side Mounted Unsupported(Max)	= 3.0m

Layout of the Chain

Ls: Stroke Hs: Safe Space

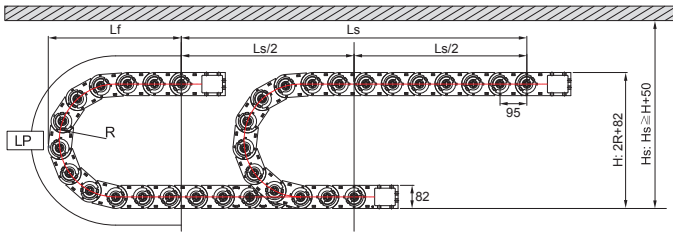

Bending Radius(R)	Lp(Loop Length)	LF(Loof Projection)	H(Moving Height)
135	805	366	352
150	852	381	382
200	1009	431	482
230	1103	461	542
280	1,260	511	642
400	1,637	631	882

Unsupported Length

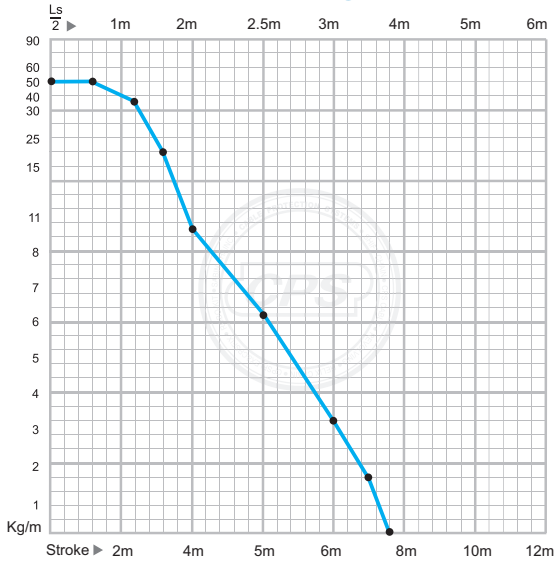

Chain Cross Section

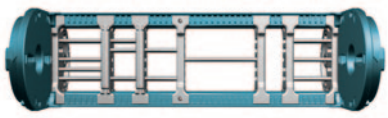

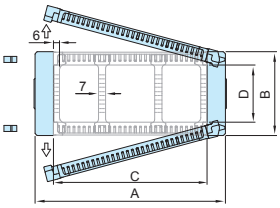

Chain Type	A Width (Outer)	B Height(Outer)	C Frame/Width(Inner)	D Height (Inner)	Weight kg/m
ST095N	113	82	75	56	3.11
	138		100		3.17
	163		125		3.37
	188		150		3.49
	213		175		3.60
	228		190		3.71
	238		200		3.79
	268		230		3.95
	278		240		4.00
	288		250		4.05
	338		300		4.31
	388		350		4.69
	438		400		5.05

(Dimensions in mm) CPS CP SYSTEM CO.,LTD. www.cpsystem.co.kr

ST095N

Steel End Bracket (SEB)

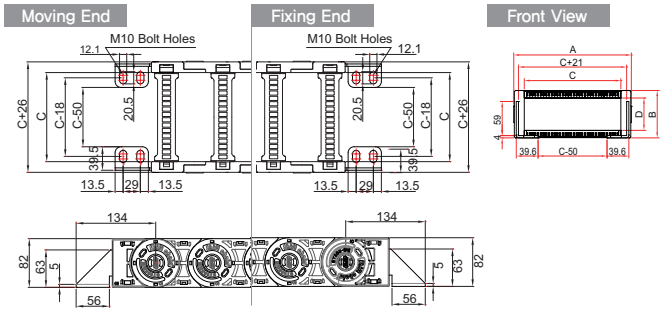

Separators (SP)

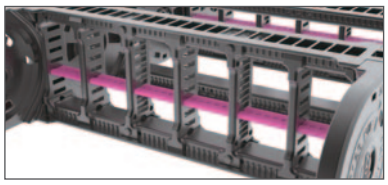

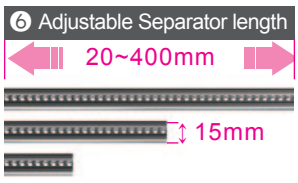

Chain Type	Ordering No.
ST095N	sb-SP/400.Frame

Free End Bracket (FEB)

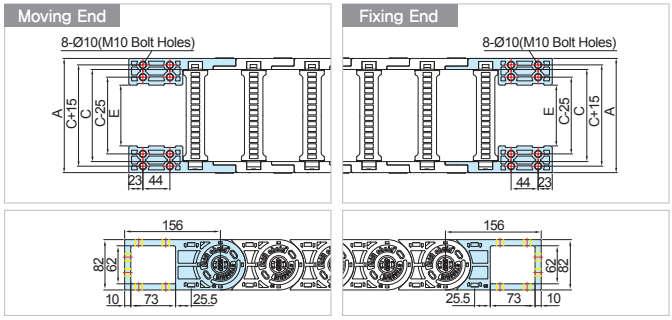

Front point

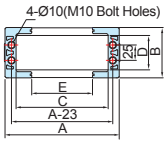

System Tie Wrap (STW)

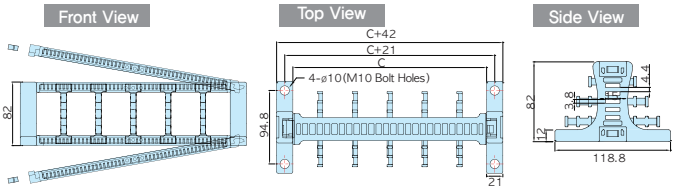

Tie Wrap (TW)

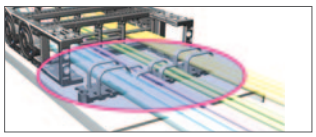

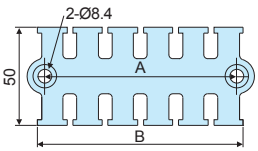

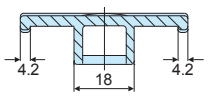

Dividers (DV)

Assemble divider every second frame
DV/T Applied to Frame 250~400
DV/M Normal Divider
DV/W Tie wrap divider for free end bracket(FEB)

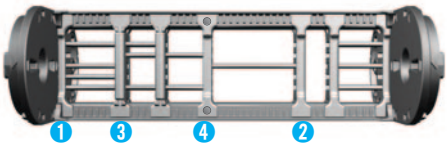

System tie wrap

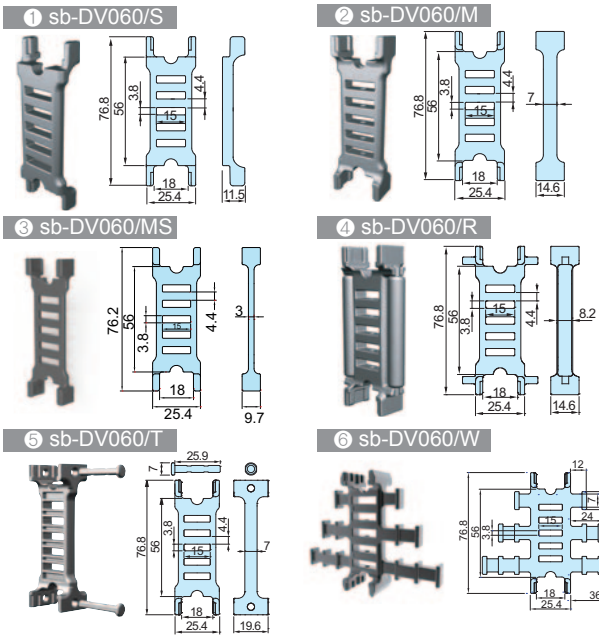

Chain Type	A Width (Outer)	B Height (Outer)	C Frame Width	D Height (Inner)	E EB internal width	Hole Type
ST95N	113 138 163 188 213 228 238 268 278 288 338 388 438	82	75 100 125 150 175 190 200 230 240 250 300 350 400	56	24 49 74 99 124 139 149 179 189 199 249 299 349	M10 Bolt Holes

Chain Type	Ordering No.	C Frame	Hole Type
ST095N	S-TW.EB060.75 S-TW.EB060.100 S-TW.EB060.125 S-TW.EB060.150 S-TW.EB060.175 S-TW.EB060.190 S-TW.EB060.200 S-TW.EB060.230 S-TW.EB060.240 S-TW.EB060.250 S-TW.EB060.300 S-TW.EB060.350 S-TW.EB060.400	75 100 125 150 175 190 200 230 240 250 300 350 400	M10 Bolt Holes

Chain Type	Ordering No.	A	B
ST095N	S-TW50 S-TW75 S-TW100 S-TW125 S-TW150	58 75 98 122 141	65 82 105 129 148

ST120N

Shift Chain®

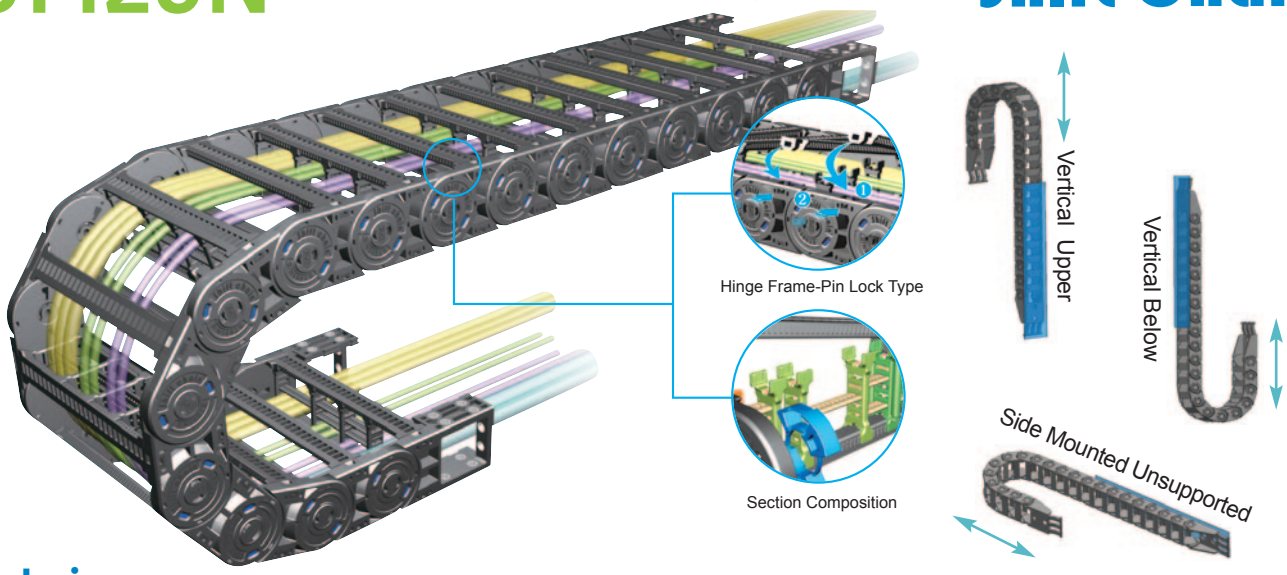

Ordering

ST120N. 100. R180/F – 3840L : (DV:2)

- ST120N: Shift Chain
- 100: Inside Width
- R180: Bending Radius
- F: Bracket Type
- 3840L: Length (mm)
- (DV:2): Quantity of Divider (Link)

Normal Type(N)

Caculation of the Chain Length

$$[\quad L = \frac{Ls}{2} + Lp \quad]$$

Layout of the Chain

Ls: Stroke Hs: Safe Space

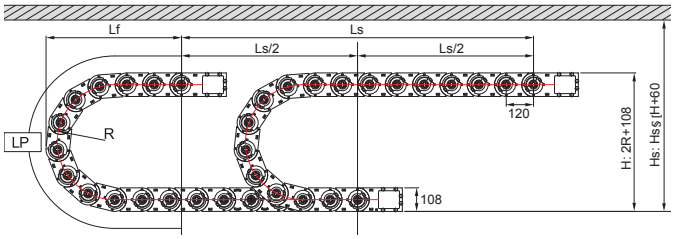

Bending Radius(R)	Lp(Loop Length)	LF(Loof Projection)	H(Moving Height)
180	1,046	474	468
200	1,109	494	508
250	1,266	544	608
300	1,423	594	708
350	1,580	644	808
400	1,737	694	908
500	2,051	794	1,108

Other Length Restrictions

Vertical Standing(Max)	= 6.0m
Vertical Hanging(Max)	= 120.0m
Side Mounted Unsupported(Max)	= 3.0m

Unsupported Length

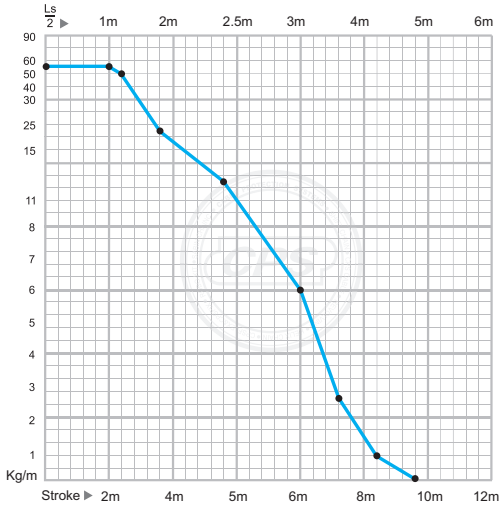

Chain Cross Section

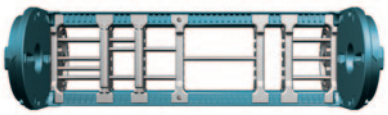

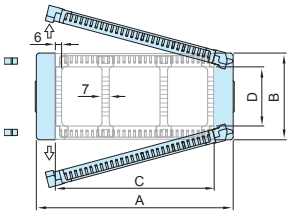

Chain Type	A Width (Outer)	B Height(Outer)	C Frame/Width(Inner)	D Height (Inner)	Weight kg/m
ST120N	117	108	75	78	4.41
	142		100		4.53
	157		115		4.61
	167		125		4.67
	192		150		4.78
	217		175		4.93
	242		200		5.17
	282		240		5.41
	292		250		5.47
	332		290		5.80
	342		300		5.88
	392		350		6.30
	442		400		6.73
	492		450		7.07
	542		500		7.30
	592		550		8.13
	642		600		8.30

(Dimensions in mm)

ST120N

Steel End Bracket (SEB)

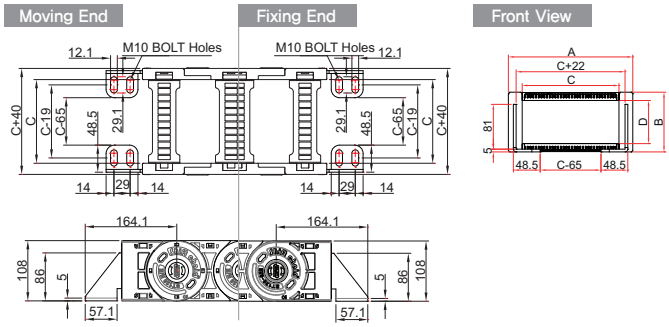

Separators (SP)

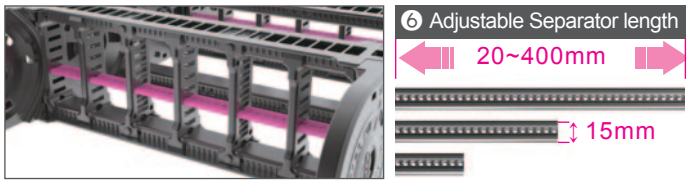

Chain Type	Ordering No.
ST120N	sb-SP/600.Frame

Free End Bracket (FEB)

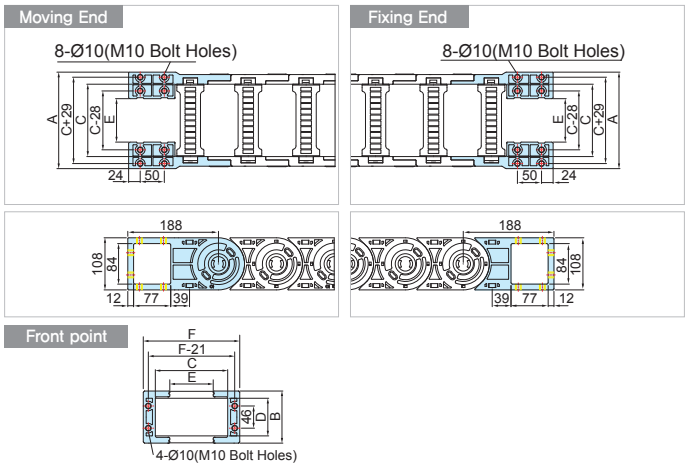

System Tie Wrap (STW)

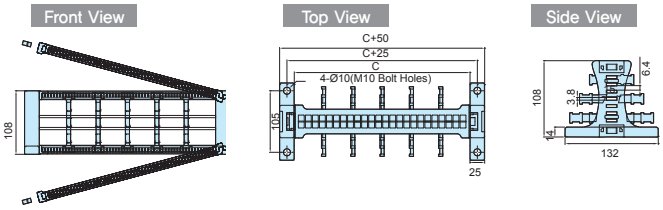

Tie Wrap (TW)

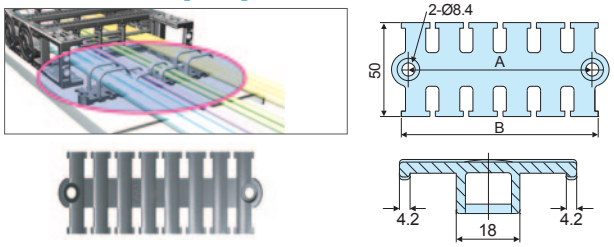

Dividers (DV)

Assemble divider every second frame
DV/T Applied to Frame 300~600
DV/M Normal Divider
DV/W Tie wrap divider for free end bracket(FEB)

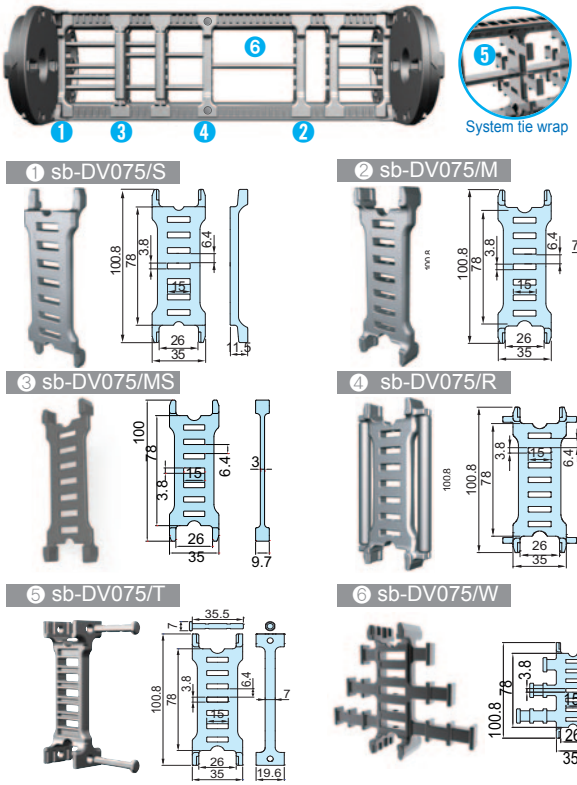

Chain Type	A Width (Outer)	B Height (Outer)	C Frame Width	D Height (Inner)	E EB internal width	Hole Type
ST120N	125 150 165 175 200 225 250 290 300 340 350 400 450 500 550 600 650	108	75 100 115 125 150 175 200 240 250 290 300 350 400 450 500 550 600	78	15 40 55 65 90 115 140 180 190 230 240 290 340 390 440 490 540	M10 Bolt Holes

Chain Type	Ordering No.	C Frame	Hole Type
ST120N	S-TW.EB075.75 S-TW.EB075.100 S-TW.EB075.115 S-TW.EB075.125 S-TW.EB075.150 S-TW.EB075.175 S-TW.EB075.200 S-TW.EB075.240 S-TW.EB075.250 S-TW.EB075.290 S-TW.EB075.300 S-TW.EB075.350 S-TW.EB075.400 S-TW.EB075.450 S-TW.EB075.500 S-TW.EB075.550 S-TW.EB075.600	75 100 115 125 150 175 200 240 250 290 300 350 400 450 500 550 600	M10 Bolt Holes

Chain Type	Ordering No.	A	B
ST120N	S-TW50 S-TW75 S-TW100 S-TW125 S-TW150	58 75 98 122 141	65 82 105 129 148

ST150N

Shift Chain®

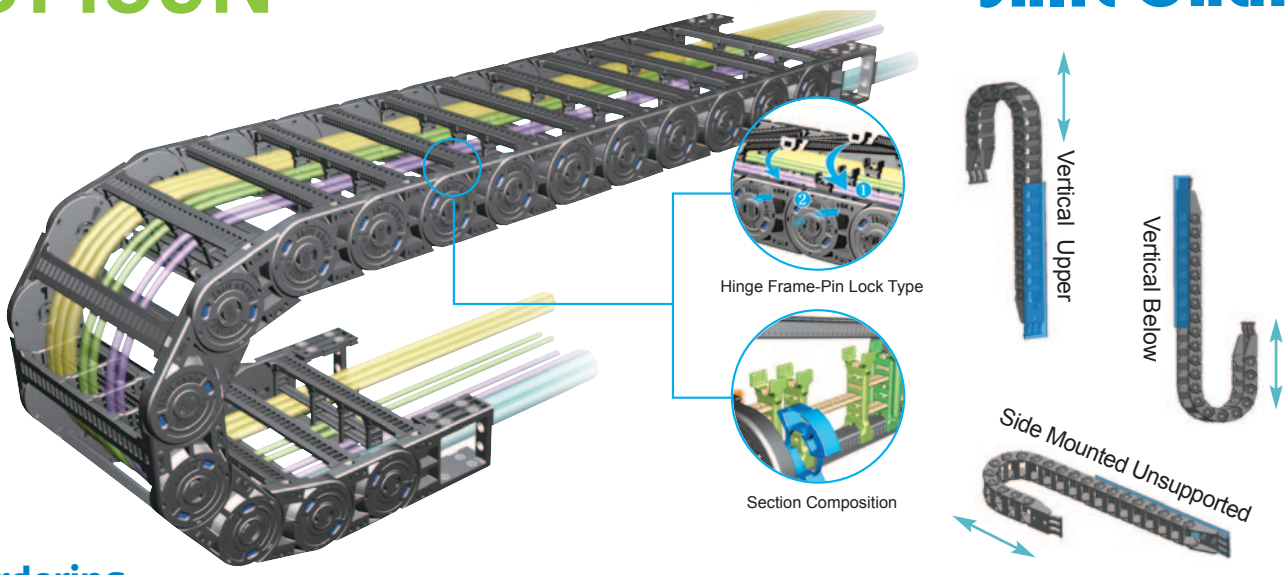

Ordering

ST150N. 100. R205/F – 4800L : (DV:2)

- ST150N: Shift Chain
- 100: Inside Width
- R205: Bending Radius
- F: Bracket Type
- 4800L: Length (mm)
- (DV:2): Quantity of Divider (Link)

Normal Type(N)

Caculation of the Chain Length

$$L = \frac{Ls}{2} + Lp$$

Other Length Restrictions

Vertical Standing(Max)	= 7.0m
Vertical Hanging(Max)	= 150.0m
Side Mounted Unsupported(Max)	= 4.0m

Layout of the Chain

Ls: Stroke Hs: Safe Space

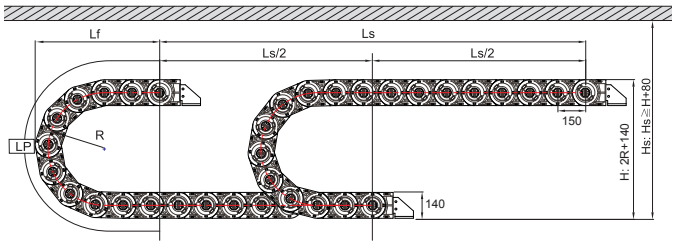

Bending Radius(R)	Lp(Loop Length)	LF(Loof Projection)	H(Moving Height)
205	1245	575	550
305	1559	675	750
405	1873	775	950
505	2187	875	1,150
605	2501	975	1,350

Unsupported Length

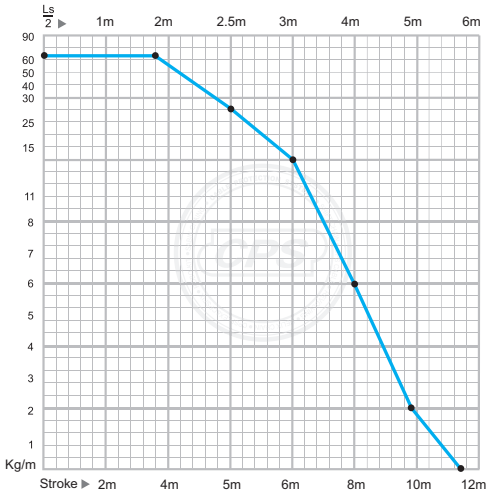

Chain Cross Section

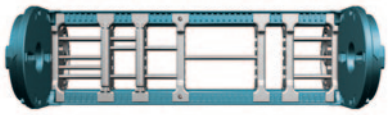

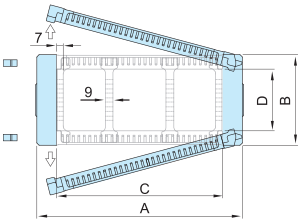

Chain Type	A Width (Outer)	B Height(Outer)	C Frame/Width(Inner)	D Height (Inner)	Weight kg/m
ST150N	121	140	75	110	5.85
	146		100		5.96
	161		115		6.03
	171		125		6.08
	196		150		6.18
	221		175		6.30
	246		200		6.51
	286		240		6.72
	296		250		6.78
	336		290		7.06
	346		300		7.14
	396		350		7.51
	446		400		7.88
	496		450		8.18
	546		500		8.37
	596		550		9.11
	646		600		9.26

(Dimensions in mm)

ST150N

Separators (SP)

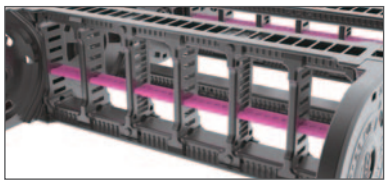

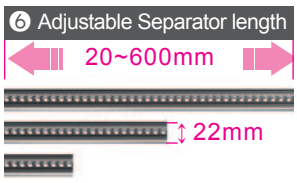

Chain Type	Ordering No.
ST150N	sb-SP/600.Frame

End Bracket(EB)

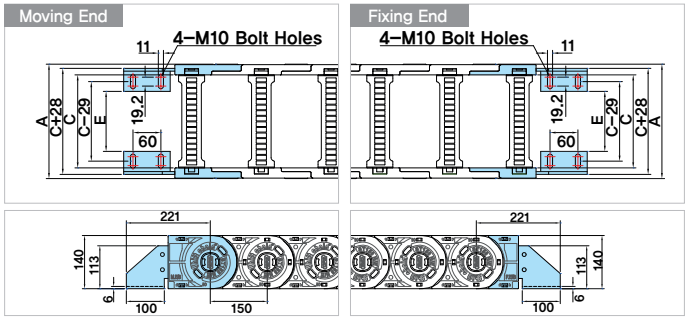

Chain Type	A Width (Outer)	B Height(Outer)	C Frame Width	D Height(Inner)	E EB internal width	Hole Type
ST50N	121 146 161 171 196 221 246 286 296 336 346 396 446 496 546 596 646	140	75 100 115 125 150 175 200 240 250 290 300 350 400 450 500 550 600	110	4 29 44 54 79 104 129 169 179 219 229 279 329 379 429 479 529	M10 Bolt Holes

Dividers (DV)

Assemble divider every second frame
DV/T Applied to Frame 300~600
DV/M Normal Divider

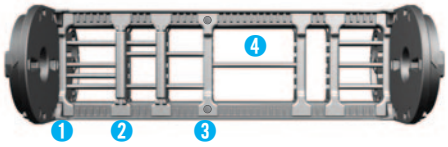

1 sb-DV100/S

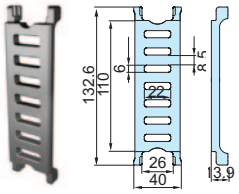

2 sb-DV100/M

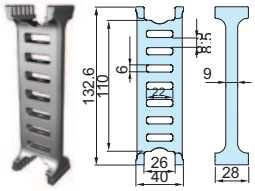

3 sb-DV100/MS

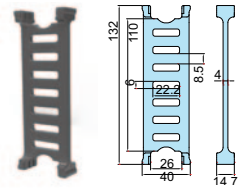

4 sb-DV100/T

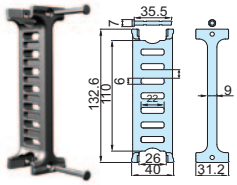

Tie Wrap (TW)

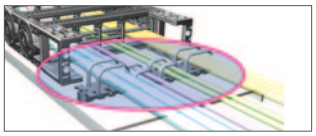

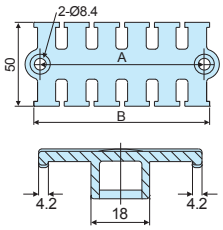

Chain Type	Ordering No.	A	B
ST150N	S-TW50 S-TW75 S-TW100 S-TW125 S-TW150	58 75 98 122 141	65 82 105 129 148