LIMON

LIMON
PRECISION&SPEED

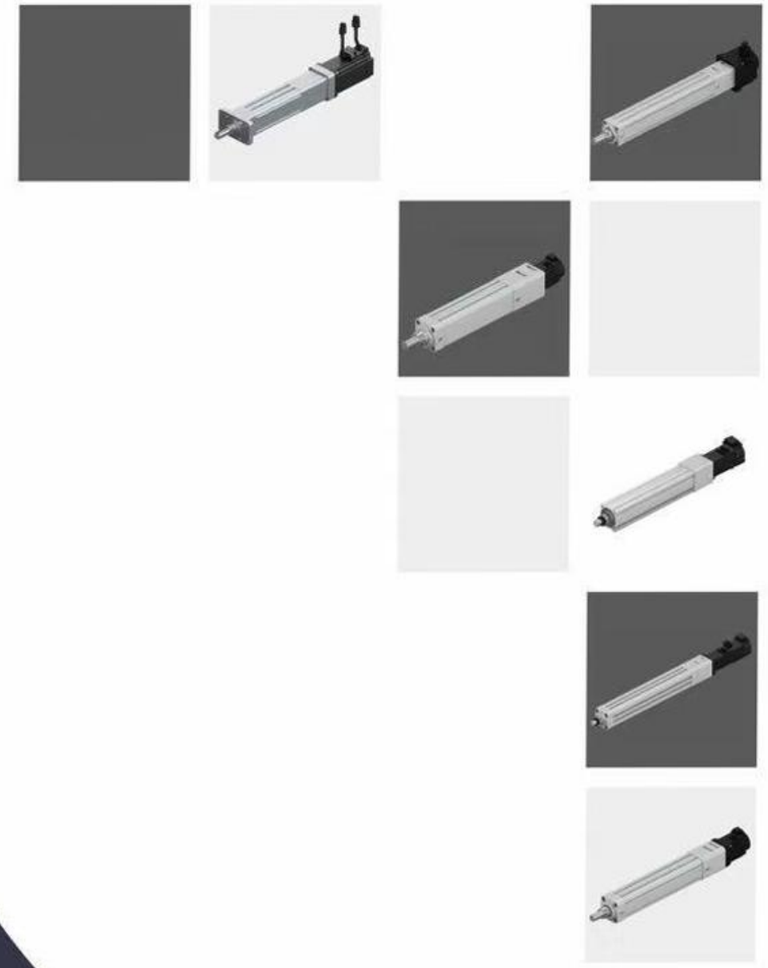

CONTACT US

总部：浙江省宁波市高新区清逸路215弄智造港D8、D9幢

华东：江苏省苏州市姑苏区平江万达广场写字楼B座2704

华南：深圳市宝安区新桥街道沙企社区中心路18号高盛大厦B808

Tel/电话：0086-0574-87515351

Head office: Building D8-D9,Zhizaogang,Lan 215,QingyiRoad,High-tech zone, Ningbo City,Zhejiang,China

East China: Room 2704,Building B,Wanda Plaza,Pingjiang,Gusu District,Suzhou City, Jiangsu Province

East China: B808 Goldman Sachs Building,No.18 Zhongxin Road,Shaqi Comunity, Xinqiao StreetBao'an District,Shenzhen

LIMON AUTO TECH CO,.LTD

WWW.limonrobot.cn

电动缸样本

Electric cylinder sample

CAT F.2501

目 录
Contents

1-2 结构特点/主要特性
Structural Characteristics/Main Characteristics

3-4 电动缸选型指南
Electric Cylinder Selection Guide

5-6 LMC25

7-8 LMC32

9-11 LMC40

12-14 LMC40S

目 录
Contents

LMC50 15-18

LMC50S 19-22

LMC63 23-26

LMC63S 27-30

LMC80 31-34

操作说明 35-38
Opeartion Description

LIMON PRECISION&SPEED

结构特点
Structural Characteristics

电动缸是将电机的旋转运动转换为推杆的直线运动。利用伺服电机的闭环控制特性，可以很方便地实现对推力、速度和位置的精密控制，利用现代运动控制技术、数控技术及总线（网络）技术，实现程序化、总线(网络）化控制。由于其控制、使用的方便性，将实现气缸和液压缸传动所不能实现的精密运动控制。

The electric cylinder converts the rotating motion of the motor into the linear motion of the push rod. With the closed-loop control characteristic of servo motor, the precise control of thrust, speed and position can be realized easily. Using modern motion control technology, numerical control technology and bus (network) technology, the program and bus (network) control is realized. Because of its easy control and use, it will realize the precision motion control that the cylinder and hydraulic cylinder drive can not achieve.

LMC 系列电动缸采用先进的模块化设计方法，具有：

LMC series electric cylinder adopts advanced modular design method, with:

- 结构紧凑、外形尺寸小
- 高性能、低惯量、低噪音、高响应
- 高可靠性、长工作寿命
- 同时拥有滚珠丝杆和滚柱丝杆及T型丝杆的应用技术
- 安装、使用方便、省能源、简维护

- *Compact structure and small size*
- *High performance, low inertia, low noise, high response*
- *High reliability and long working life*
- *At the same time, it has the application technology of ball screw and roller screw and T-screw*
- *Installation, easy to use, energy saving, simple maintenance*

直连型电动缸 *Direct connected electric cylinder*

本系列电动缸集成了交流伺服电机、伺服驱动器、高精度滚珠丝杆、模块化设计等技术，整个电动缸具有结构紧凑、惯量小、响应快、低噪音和长寿命等特点。伺服电机与电动缸的传动丝杆直接相连接，使伺服电机的编码器直接反馈电缸移动活塞的位移量，减少了中间环节的惯量和间隙，提高了控制性和控制精度。伺服电机与电动缸整体相连，安装容易、设定简单、使用方便。

The electric cylinder converts the rotating motion of the motor into the linear motion of the push rod. With the closed-loop control characteristic of servo motor, the precise control of thrust, speed and position can be realized easily. Using modern motion control technology, numerical control technology and bus (network) technology, the program and bus (network) control is realized. Because of its easy control and use, it will realize the precision motion control that the cylinder and hydraulic cylinder drive can not achieve.

转折型电动缸 *Turning point electric cylinder*

转折型电动缸由于整体长度短，适用于安装位置比较小的场合。同时本方案选用的同步带，具有强度高、间隙小、寿命长的特点，使整个电动缸具有较高的控制性和控制精度。伺服电机与电动缸配合灵活，安装容易，设定简单，使用方便。

Due to the short overall length, the turning point electric cylinder is suitable for the installation position is relatively small. At the same time, the synchronous belt selected in this scheme has the characteristics of high strength, small gap and long life, so that the whole electric cylinder has high control and control accuracy. Servo motor and electric cylinder cooperate flexibly, easy installation, simple setting, convenient use.

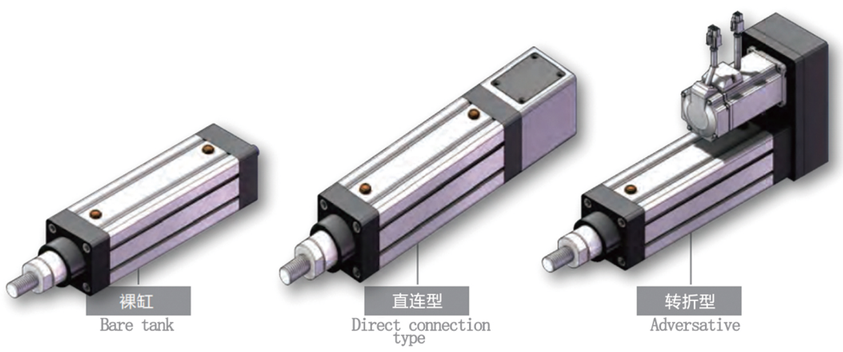

主要特性
Main Characteristics

1	节能干净、超长寿命、操作维护简单，具有很强的环境适应能力。伺服电动缸不容易受到周围环境温度的影响，可在低、高温，雨雪等恶劣环境下无故障正常工作，防护等级可以定制IP65。 *Energy saving and clean, long life, simple operation and maintenance, with strong environmental adaptability. The servo electric cylinder is not easy to be affected by the ambient temperature, and can work normally without fault in low, high temperature, rain and snow and other harsh environments. Protection level can be customized IP68.*
2	传动效率高。采用精密滚珠丝杠或行星滚柱丝杠等精密传动元件的电动缸，传动效率可以达到90%以上。 *High transmission efficiency. Using precision ball screw or planetary roller screw and other precision transmission components of the electric cylinder, transmission efficiency can reach more than 90%.*
3	定位精度高。通过伺服控制可以实现±0.01mm的精确定位，具有很高的定位精度，适合应用在对精度要求比较高的场合。 *High positioning accuracy. The servo control can achieve the precise positioning of ±0.005mm, with high positioning accuracy, suitable for application in the case of high precision requirements.*
4	结构简单，占用空间小，维护方便。 *Simple structure, small space, easy maintenance.*
5	可靠性和安全性高。电动缸可以配合各类传感器系统，以及各种行程控制装置，对电动缸的工作状态进行检测和反馈，形成全闭环控制。 *High reliability and security. The electric cylinder can be combined with various sensor systems and various stroke control devices to detect and feedback the working state of the electric cylinder to form a full closed-loop control.*
6	电动缸采用滚珠丝杠或行星滚柱丝杠，传动部分的摩擦较小，提高运行稳定性，延长使用寿命。 *The electric cylinder adopts ball screw or planetary roller screw, and the friction of the transmission part is small,improving the operation stability and extending the service life.*
7	直线工作速度可以达到1000 mm/s，速度优势非常明显。 *Linear working speed can reach 2000 mm/s, the speed advantage is very obvious.*

电缸外部安装配件一览 *Overview of External Mounting Accessories for Electric Cylinder*

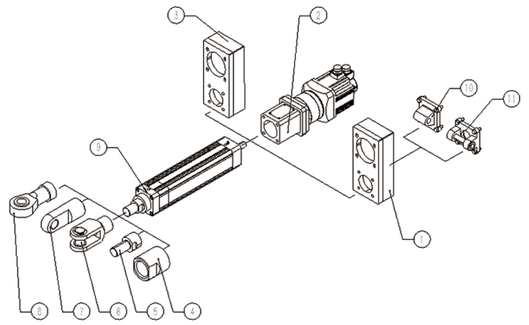

序号*No.*	名称*Name*	代号*Code*
1	电机加强转折板 *Motor Reinforced Pivot Plate*	PJ
2	电机直联 *Motor Direct Coupling*	S
3	电机转折板 *Motor Pivot Plate*	P
4	轴端内螺纹连接 *Shaft End Internal Thread Connection*	B
5	轴端外螺纹连接 *Shaft End External Thread Connection*	/
6	轴端U型铰接 *Shaft End U-Type Joint*	Y
7	轴端I型铰接 *Shaft End I-Type Joint*	I
8	轴端关节轴承 *Shaft End Rod-End Bearing*	G
9	前法兰锁紧 *Front Flange Locking*	/
10	单片尾铰 *Single-Piece Rear Clevis*	CA
11	双片尾铰 *Double-Piece Rear Clevis*	CB

©2024 LIMON® - All rights reserved - The contents of this document are subject to change without prior notice.

电机输出扭矩与电动缸输出力的关系
The relation between the output torque of motor and the output force of electric cylinder

$$F=T\times\eta\times2\pi\times R/L$$

F	电动缸输出力，单位：kN *Electric cylinder output force, unit: kN*
T	电机输出扭矩，单位：Nm *Motor output torque, unit: Nm*
R	减速比 *Reduction ratio*
L	丝杆导程，单位：mm *Lead of lead screw, unit: mm*
η	效 率(一般选择电动缸的总效率为85%，但是效率根据实际使用工况会有变化，请注意) *Efficiency (The total efficiency of the electric cylinder is generally 85%, but the efficiency will change according to the actual working conditions, please note)*

电动缸的寿命计算
Life calculation of electric cylinder

电动缸的寿命一般指电动缸内部使用的丝杆寿命，可分为两个部分，一是丝杆的疲劳寿命，它可以通过计算得出；另一个是使用寿命，取决于使用条件（如温度、灰尘、使用润滑的种类和定期添加的频率等），使用寿命往往通过经验得出。以下是疲劳寿命的计算方法：

The life of the electric cylinder generally refers to the life of the lead screw used inside the electric cylinder, which can be divided into two parts, one is the fatigue life of the lead screw, which can be calculated Out; The other is the service life, depending on the conditions of use (such as temperature, dust, the type of lubrication used and the frequency of regular additions, etc.).Service life is often learned by experience. The following is the calculation method of fatigue life:

$$L10=(Ca/Fm)3\times L$$

- L10：电动缸的寿命，单位：Km
- Fm：电动缸承受的平均负载，单位：kN
- C a： 丝杆螺母的基本额定动负载，单位kN（可通过丝杆样本查出）
- L：丝杆导程，单位：mm

- *L10: life of electric cylinder, unit: Km*
- *Fm: The average load of the electric cylinder, unit: kN*
- *Ca: The basic rated dynamic load of the screw nut, in kN (can be found by screw sample)*
- *L: lead of the lead screw, unit: mm*

平均负载的计算
Calculation of average load

平均负载是指电动缸在一个工作循环中，综合在各个不同工作区间的力、速度和时间后得出的立方平均值。

The average load refers to the cubic average value of the electric cylinder in a working cycle, which is obtained after synthesizing the force, speed and time in different working intervals

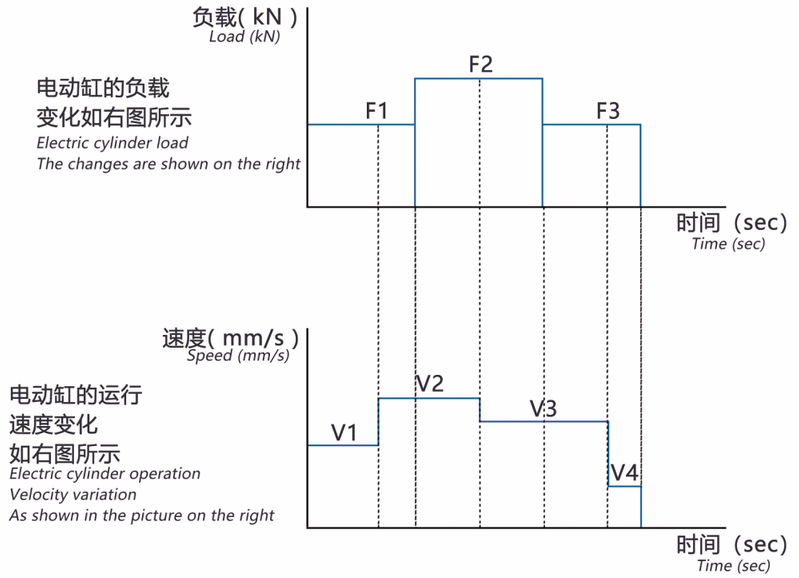

电动缸平均负载的计算公式如下：
The average load of the electric cylinder is calculated as follows:

$$Fm=3\sqrt{\frac{F_1^3\times V_1\times t_1+F_1^3\times V_2\times t_2+F_2^3\times V_2\times t_3+F_2^3\times V_3\times t_4+F_2^3\times V_3\times t_4+F_3^3\times V_3\times t_5+F_3{}^3\times V_4\times t_6}{V_1\times t_1+V_2\times t_2+V_2\times t_3+V_3\times t_4+V_3\times t_5+V_4\times t_6}}$$

©2024 LIMON® - All rights reserved - The contents of this document are subject to change without prior notice.

型号订购码 Code

LMC 25	- 1205	- 50	- S	- □	- □	- M10	- □	- S1
本体型号 Item No.	丝杆规格 Lead Screw Specifications	行程(mm) Stroke range	安装方式 Mounting mode	轴端安装方式 Shaft end mounting mode	本体安装方式 Body Mounting Method	马达品牌及功率 Motor brand/power	减速比 Reduction ratio	磁性开关数量 Number of agnetic Reed Switches
	1205 1210 1220	50-500，间隔50 50-500,gap 50	S：马达直连型 S：Motor Direct mounting PJ：转折加强型(注1) PJ：Indirect enhance mounting	缺省：外螺纹 Default：External thred B：内螺纹 B：Internal thread G：杆端关节轴承 G：Rod end joint Y：U型叉铰 Y：Rod clevis U I：I型叉铰 I：Rod clevis I	前盖 Front Cover DX：导向架 DX：Guide Frame LB：侧法兰 LB：Side Flange TC：底面耳轴 TC：Bottom Trunnion CA：单片尾铰 CA：Single Tail Hinge CB：双片尾铰 CB：Double Tail Hinge	M10：三菱100W M10：Mitubishi 100W P10：松下100W P10：Panasonic 100W	缺省：马达直连 Default：Direct motor connection G3：3比减速 G3：3-ratio reduction G5：5比减速 G5：5-ratio reduction G10：10比减速 G10：10-ratio reduction	S1：1个 S1：1PCS S2：2个 S2：2PCS S3：3个 S3：3PCS

注1： P型为钣金罩壳，不可用于电缸尾部安装。 PJ型为高强度铝合金罩壳，可用于电缸尾部安装。
Note 1: Type P is a sheet metal cover and cannot be used for installation at the rear of the electric cylinder. PJ type is a high-strength aluminum alloy housing, which can be used for the electric cylinder tail installation.

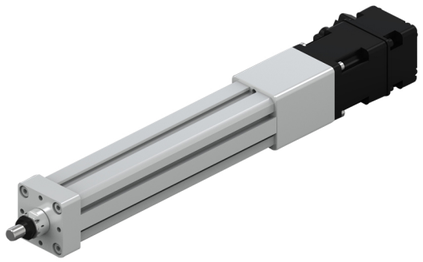

防止回转精度 Anti-rotating Accuracy

出力杆的防止回转精度
Anti-rotatingAccuracy of Rod

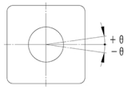

防止回转精度 Anti-rotating accuracy
± 0.01°

※使用时请避免活塞捍承受回转扭力，因为有可能会造成防转块变形，导致自动开关反应异常，内部滑轨变形，进而造成增加作动阻抗。
※Avoid using the electric actuator in such a way that rotationaltorque would be applied to the piston rod
This may cause deformation of the Anti-rotating guide,abnormal responses of the auto switch, play in theinternal guide or an increase in the sliding resistance.

基本规格 Basic Specification

基本规格 Basic specification	丝杆直径(mm) Screw Diameter	12		
	丝杆精度等级 Screw accuracy class	C7		
	丝杆导程(mm) Screw lead	5	10	20
	行程范围(mm) Stroke Range	50-500mm/50 pitch	50-500mm/50 pitch	50-500mm/50 pitch
	重复定位精度(mm) Repetitive accuracy	±0.01、（≥300mm) ±0.02	±0.01、（≥300mm) ±0.02	±0.01、（≥300mm) ±0.02
	丝杆额定动载荷N Screw rated dynamic load rating	5380	5430	3775
马达输入 The motor input	马达额定功率(W) Motor rated power	100	100	100
	马达额定转速(rpm) Motor rated speed	3000	3000	3000
	马达额定扭矩(N·M) Motor rated torque	0.32	0.32	0.32
	减速比 Reduction ratio	/	/	/
电推缸推力输出 Thrust Output	额定输出推力(N) Rated output thrust	330	160	84
	额定推力(N) Rate thrust	330	160	84
	额定速度（mm/s) Rated speed	250	500	1000

注： 电缸额定推力在丝杆额定动载荷与电机额定输出推力中取最小值
Note: The rated thrust of the electric cylinder is determined as the minimum value among the Screw rated dynamic load rating and the rated output thrust of the motor.

轴端安装方式 Shaft End Mounting Direction

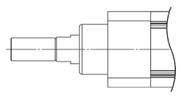
外螺纹 *ExternalThread*

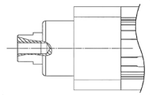
内螺纹(B) *Internal thread*

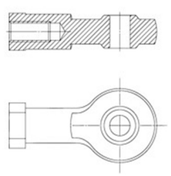
杆端关节轴承(G) *Rod End*

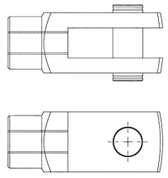
U型叉铰(Y) *Rod Clevis*

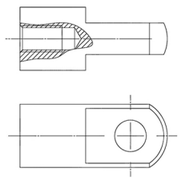
I型叉铰(I) *Clevis Foot*

马达直连型(-S)

2D&3D文档下载请至 www.limonrobot.cn

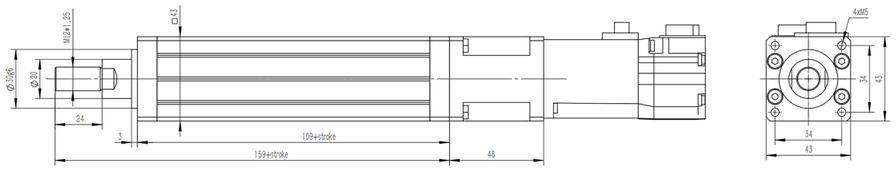

使用马达 Use Motor		PCD	连接螺钉 Connecting screw
功率 Power	品牌 Brand		
100W	三菱(M10) Mitsubishi(M10)	φ46	M4
	松下(P10) Panasonic(P10)	φ45	M3

行程(mm)Stroke	50	100	150	200	250	300	350	400	450	500
重量(kg)Weight	1.0	1.5	1.9	2.4	2.8	3.3	3.7	4.2	4.6	5.1

注： 所有对应重量均为裸缸重量(不含减速机、电机的重量)！

转折加强型(-PJ)
(可用于电缸尾部安装)

2D&3D文档下载请至 www.limonrobot.cn

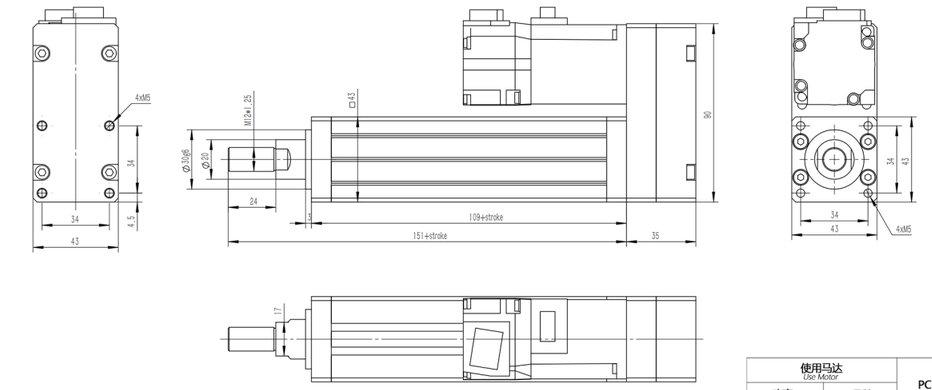

使用马达 Use Motor		PCD	连接螺钉 Connecting screw
功率 Power	品牌 Brand		
100W	三菱(M10) Mitsubishi(M10)	φ46	M4
	松下(P10) Panasonic(P10)	φ45	M3

行程(mm)Stroke	50	100	150	200	250	300	350	400	450	500
重量(kg)Weight	1.1	1.6	2.0	2.5	2.9	3.4	3.8	4.3	4.7	5.2

注： 所有对应重量均为裸缸重量(不含减速机、电机的重量)！

©2024 LIMON® - All rights reserved - The contents of this document are subject to change without prior notice.

型号订购码 Code

LMC 32	-	1205	-	50	-	S	-	□	-	□	-	M40	-	□	-	S1
本体型号 Item No.		丝杆规格 Lead Screw Specifications: 1205 / 1210 / 1220		行程(mm) Stroke range: 50-700，间隔50 (50-700,gap 50)		安装方式 Mounting mode: S：马达直连型 S: Motor Direct mounting; PJ：转折加强型 PJ: Indirect enhance mounting		轴端安装方式 Shaft end mounting mode: 缺省：外螺纹 Default: External thread; B：内螺纹 B: Internal thread; G：杆端关节轴承 G: Rod end joint; Y：U型叉铰 Y: Rod clevis U; I：I型叉铰 I: Rod clevis I		本体安装方式 Body Mounting Method: 前盖 Front Cover; DX：导向架 DX: Guide Frame; LB：侧法兰 LB: Side Flange; TC：底面耳轴 TC: Bottom Trunnion; CA：单片尾铰 CA: Single Tail Hinge; CB：双片尾铰 CB: Double Tail Hinge		马达品牌及功率 Motor brand/power: M40：三菱400W M40: Mitsubishi 400W; P40：松下400W P40: Panasonic 400W		减速比 Reduction ratio: 缺省：马达直连 Default: Direct motor connection; G3：3比减速 G3: 3-ratio reduction; G5：5比减速 G5: 5-ratio reduction; G10：10比减速 G10: 10-ratio reduction		磁性开关数量 Number of agnetic Reed Switches: S1：1个 S1: 1PCS; S2：2个 S2: 2PCS; S3：3个 S3: 3PCS

注1： P型为钣金罩壳，不可用于电缸尾部安装。 PJ型为高强度铝合金罩壳，可用于电缸尾部安装。
Note 1: Type P is a sheet metal cover and cannot be used for installation at the rear of the electric cylinder. PJ type is a high-strength aluminum alloy housing, which can be used for the electric cylinder tail installation.



防止回转精度 Anti-rotating Accuracy

出力杆的防止回转精度
Anti-rotatingAccuracy of Rod

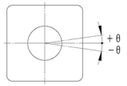

防止回转精度 Anti-rotating accuracy
± 0.01°

※使用时请避免活塞焊承受回转扭力，因为有可能会造成防转块变形，导致自动开关反应异常，内部滑轨变形，进而造成增加作动阻抗。
※*Avoid using the electric actuator in such a way that rotationaltorque would be applied to the piston rod*
This may cause deformation of the Anti-rotating guide,abnormal responses of the auto switch, play in theinternal guide or an increase in the sliding resistance.

基本规格 Basic Specification

基本规格 Basic specification	丝杆直径(mm) Screw Diameter	12		
	丝杆精度等级 Screw accuracy class	C7		
	丝杆导程(mm) Screw lead	5	10	20
	行程范围(mm) Stroke Range	50-700mm/50 pitch	50-700mm/50 pitch	50-700mm/50 pitch
	重复定位精度(mm) Repetitive accuracy	±0.01、（≥300mm) ±0.02	±0.01、（≥300mm) ±0.02	±0.01、（≥300mm) ±0.02
	丝杆额定动载荷N Screw rated dynamic load rating	5380	5430	
马达输入 The motor input	马达额定功率(W) Motor rated power	400	400	400
	马达额定转速(rpm) Motor rated speed	3000	3000	3000
	马达额定扭矩(N·M) Motor rated torque	0.32	0.32	0.32
	减速比 Reduction ratio	/	/	/
	额定输出推力(N) Rated output thrust	1280	640	320
电推缸推力输出 Thrust Output	额定推力(N) Rate thrust	1280	640	320
	额定速度（mm/s) Rated speed	250	500	1000

注： 电缸额定推力在丝杆额定动载荷与电机额定输出推力中取最小值
Note: The rated thrust of the electric cylinder is determined as the minimum value among the Screw rated dynamic load rating and the rated output thrust of the motor.

轴端安装方式 Shaft End Mounting Direction

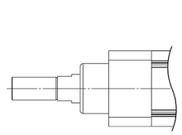
外螺纹 *ExternalThread*

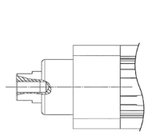
内螺纹(B) *Internal thread*

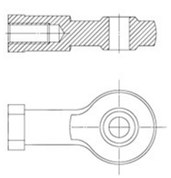
杆端关节轴承(G) *Rod End*

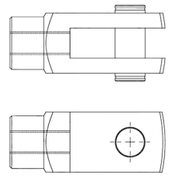
U型叉铰(Y) *Rod Clevis*

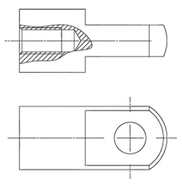
I型叉铰(I) *Clevis Foot*

马达直连型(-S)

2D&3D文档下载请至 www.limonrobot.cn

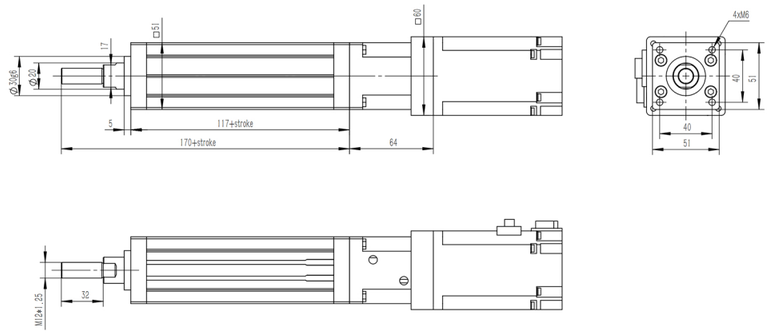

使用马达 Use Motor		PCD	连接螺钉 Connecting screw
功率 Power	品牌 Brand		
400W	三菱(M40) Mitsubishi(M40)	φ70	M5
	松下(P40) Panasonic(P40)		M4

行程(mm)Stroke	50	100	150	200	250	300	350	400	450	500	550	600	650	700
重量(kg)Weight	1.5	2.2	2.8	3.5	4.1	4.8	5.4	6.1	6.7	7.4	8.0	8.7	9.3	10.0

注： 所有对应重量均为裸缸重量(不含减速机、电机的重量)!

转折加强型(-PJ)
(可用于电缸尾部安装)

2D&3D文档下载请至 www.limonrobot.cn

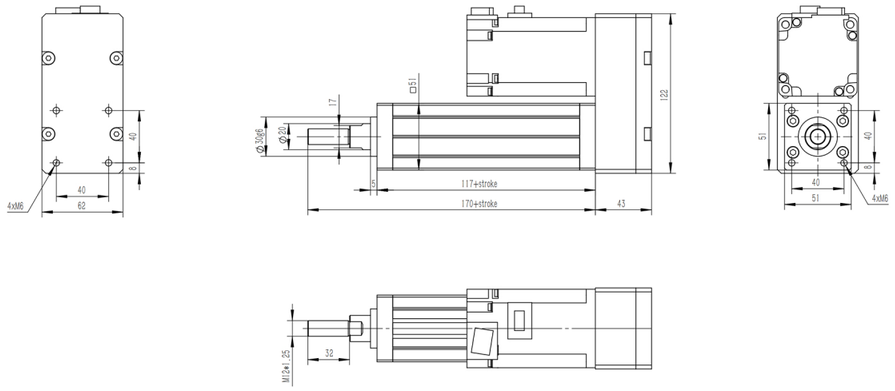

使用马达 Use Motor		PCD	连接螺钉 Connecting screw
功率 Power	品牌 Brand		
400W	三菱(M40) Mitsubishi(M40)	φ70	M5
	松下(P40) Panasonic(P40)		M4

行程(mm)Stroke	50	100	150	200	250	300	350	400	450	500	550	600	650	700
重量(kg)Weight	1.8	2.4	3.1	3.7	4.4	5.0	5.7	6.3	7.0	7.6	8.3	8.9	9.6	10.2

注： 所有对应重量均为裸缸重量(不含减速机、电机的重量)!

©2024 LIMON® - All rights reserved - The contents of this document are subject to change without prior notice.

型号订购码 Code

LMC 40	-	1205	-	50	-	S	-	□	-	□	-	M40	-	□	-	S1
本体型号 Item No.		丝杆规格 Lead Screw Specifications		行程(mm) Stroke range		安装方式 Mounting mode		轴端安装方式 Shaft end mounting mode		本体安装方式 Body Mounting Method		马达品牌及功率 Motor brand/power		减速比 Reduction ratio		磁性开关数量 Number of agnetic Reed Switches
		1205 1210 1220		50-1000，间隔50 50-1000,gap 50		S：马达直连型 S：Motor Direct mounting P：马达转折型 P：Motor indirect mounting PJ：转折加强型 PJ：Indirect enhance mounting		缺省：外螺纹 Default：External thread B：内螺纹 B：Internal thread G：杆端关节轴承 G：Rod end joint Y：U型叉铰 Y：Rod clevis U I：I型叉铰 I：Rod clevis I		前盖 Front Cover DX：导向架 DX：Guide Frame LB：侧法兰 LB：Side Flange TC：底面耳轴 TC：Bottom Trunnion CA：单片尾铰 CA：Single Tail Hinge CB：双片尾铰 CB：Double Tail Hinge		M40：三菱400W M40：Mitsubishi 400W P40：松下400W P40：Panasonic 400W		缺省：马达直连 Default：Direct motor connection G3：3比减速 G3：3-ratio reduction G5：5比减速 G5：5-ratio reduction G10：10比减速 G10：10-ratio reduction		S1：1个 S1：1PCS S2：2个 S2：2PCS S3：3个 S3：3PCS

注1： P型为钣金罩壳，不可用于电缸尾部安装。 PJ型为高强度铝合金罩壳，可用于电缸尾部安装。
Note 1: Type P is a sheet metal cover and cannot be used for installation at the rear of the electric cylinder. PJ type is a high-strength aluminum alloy housing, which can be used for the electric cylinder tail installation.

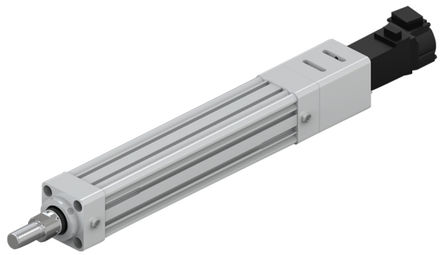

防止回转精度 Anti-rotating Accuracy

出力杆的防止回转精度
Anti-rotatingAccuracy of Rod

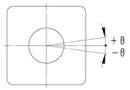

防止回转精度 Anti-rotating accuracy
± 0.01°

※使用时请避免活塞焊承受回转扭力，因为有可能会造成防转块变形，导致自动开关反应异常，内部滑轨变形，进而造成增加作动阻抗。
※Avoid using the electric actuator in such a way that rotationaltorque would be applied to the piston rod
This may cause deformation of the Anti-rotating guide,abnormal responses of the auto switch, play in theinternal guide or an increase in the sliding resistance.

基本规格 Basic Specification

基本规格 Basic specification	丝杆直径(mm) Screw Diameter	12		
	丝杆精度等级 Screw accuracy class	C7		
	丝杆导程(mm) Screw lead	5	10	20
	行程范围(mm) Stroke Range	50-1000mm/50 pitch	50-1000mm/50 pitch	50-1000mm/50 pitch
	重复定位精度(mm) Repetitive accuracy	±0.01、（≥300mm) ±0.02	±0.01、（≥300mm) ±0.02	±0.01、（≥300mm) ±0.02
	丝杆额定动载荷N Screw rated dynamic load rating	5380	5430	
马达输入 The motor input	马达额定功率(W) Motor rated power	400	400	400
	马达额定转速(rpm) Motor rated speed	3000	3000	3000
	马达额定扭矩(N·M) Motor rated torque	0.32	0.32	0.32
	减速比 Reduction ratio	/	/	/
电推缸推力输出 Thrust Output	额定输出推力(N) Rated output thrust	1280	640	320
	额定推力(N) Rate thrust	1280	640	320
	额定速度（mm/s) Rated speed	250	500	1000

注： 电缸额定推力在丝杆额定动载荷与电机额定输出推力中取最小值
Note: The rated thrust of the electric cylinder is determined as the minimum value among the Screw rated dynamic load rating and the rated output thrust of the motor.

轴端安装方式 Shaft End Mounting Direction

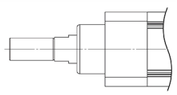
外螺纹 *ExternalThread*

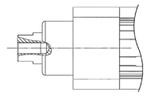
内螺纹(B) *Internal thread*

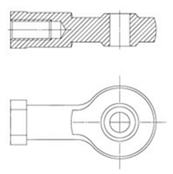
杆端关节轴承(G) *Rod End*

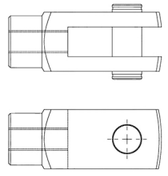
U型叉铰(Y) *Rod Clevis*

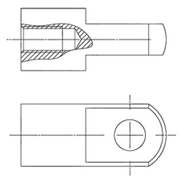
I型叉铰(I) *Clevis Foot*

马达直连型(-S)

2D&3D文档下载请至 www.limonrobot.cn

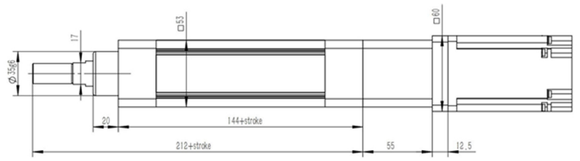

使用马达 Use Motor		PCD	连接螺钉 Connecting screw
功率 Power	品牌 Brand		
400W	三菱(M40) Mitsubishi(M40)	φ70	M5
	松下(P40) Panasonic(P40)		M4

行程(mm)Stroke	50	100	150	200	250	300	350	400	450	500
重量(kg)Weight	1.9	2.1	2.4	2.6	2.8	3.1	3.3	3.5	3.8	4.0
行程(mm)Stroke	550	600	650	700	750	800	850	900	950	1000
重量(kg)Weight	4.2	4.5	4.7	4.9	5.2	5.4	5.6	5.9	6.1	6.4

注： 所有对应重量均为裸缸重量(不含减速机、电机的重量)！

马达转折型(-P)

(不可用于电缸尾部安装)

2D&3D文档下载请至 www.limonrobot.cn

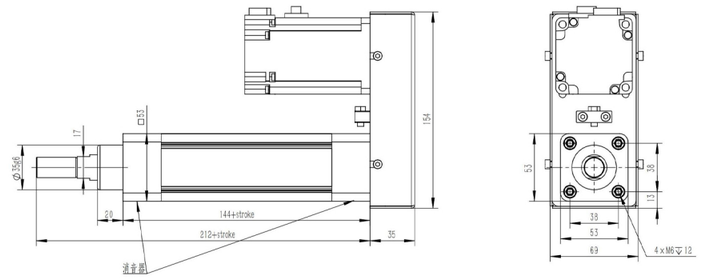

使用马达 Use Motor		PCD	连接螺钉 Connecting screw
功率 Power	品牌 Brand		
400W	三菱(M40) Mitsubishi(M40)	φ70	M5
	松下(P40) Panasonic(P40)		M4

行程(mm)Stroke	50	100	150	200	250	300	350	400	450	500
重量(kg)Weight	2.1	2.3	2.5	2.8	3.0	3.3	3.5	3.7	4.0	4.2
行程(mm)Stroke	550	600	650	700	750	800	850	900	950	1000
重量(kg)Weight	4.4	4.7	4.9	5.1	5.4	5.6	5.8	6.1	6.3	6.5

注： 所有对应重量均为裸缸重量(不含减速机、电机的重量)！

©2024 LIMON® - All rights reserved - The contents of this document are subject to change without prior notice.

转折加强型(-PJ)

(可用于电缸尾部安装)

2D&3D文档下载请至 www.limonrobot.cn

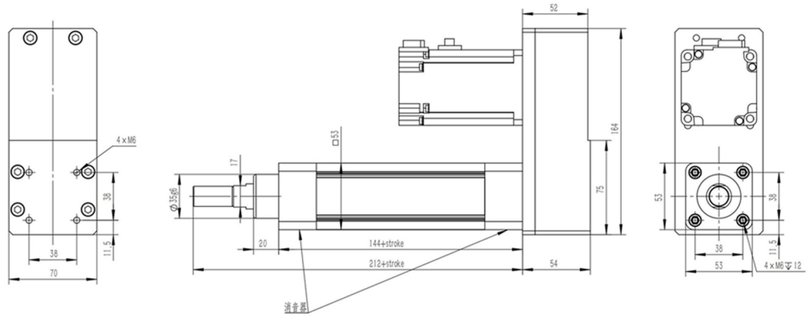

使用马达 Use Motor		PCD	连接螺钉 Connecting screw
功率 Power	品牌 Brand		
400W	三菱(M40) Mitsubishi(M40)	φ70	M5
	松下(P40) Panasonic(P40)		M4

行程(mm)Stroke	50	100	150	200	250	300	350	400	450	500
重量(kg)Weight	2.6	2.8	3.1	3.3	3.5	3.8	4.0	4.2	4.5	4.7
行程(mm)Stroke	550	600	650	700	750	800	850	900	950	1000
重量(kg)Weight	4.9	5.2	5.4	5.6	5.9	6.1	6.3	6.6	6.8	7.1

注： 所有对应重量均为裸缸重量(不含减速机、电机的重量)！

型号订购码 Code

LMC 40S	-	1205	-	50	-	S	-	□	-	□	-	M40	-	□	-	S1
本体型号 Item No.		丝杆规格 Lead Screw Specifications: 1205 / 1210 / 1220		行程(mm) Stroke range: 50-1000，间隔50 (50-1000,gap 50)		安装方式 Mounting mode: S：马达直连型 S: Motor Direct mounting; P：马达转折型 P: Motor Indirect mounting; PJ：转折加强型 PJ: Indirect enhance mounting		轴端安装方式 Shaft end mounting mode: 缺省：外螺纹 Default: External thread; B：内螺纹 B: Internal thread; G：杆端关节轴承 G: Rod end joint; Y：U型叉铰 Y: Rod clevis U; I：I型叉铰 I: Rod clevis I		本体安装方式 Body Mounting Method: 前置 Front Cover; DX：导向架 DX: Guide Frame; LB：侧法兰 LB: Side Flange; TC：底面耳轴 TC: Bottom Trunnion; CA：单片尾铰 CA: Single Tail Hinge; CB：双片尾铰 CB: Double Tail Hinge		马达品牌及功率 Motor brand/power: M40：三菱400W M40: Mitsubishi 400W; P40：松下400W P40: Panasonic 400W		减速比 Reduction ratio: 缺省：马达直连 Default: Direct motor connection; G3：3比减速 G3: 3-ratio reduction; G5：5比减速 G5: 5-ratio reduction; G10：10比减速 G10: 10-ratio reduction		磁性开关数量 Number of agnetic Reed Switches: S1：1个 S1: 1PCS; S2：2个 S2: 2PCS; S3：3个 S3: 3PCS

注1： P型为钣金罩壳，不可用于电缸尾部安装。 PJ型为高强度铝合金罩壳，可用于电缸尾部安装。

Note 1: Type P is a sheet metal cover and cannot be used for installation at the rear of the electric cylinder. PJ type is a high-strength aluminum alloy housing, which can be used for the electric cylinder tail installation.

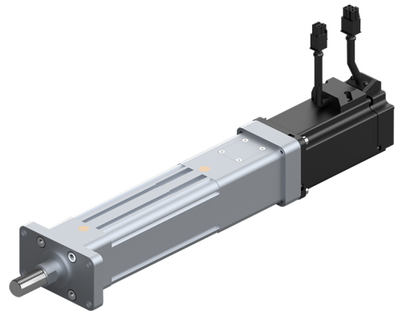

防止回转精度 Anti-rotating Accuracy

出力杆的防止回转精度
Anti-rotatingAccuracy of Rod

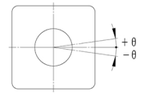

防止回转精度 Anti-rotating accuracy
± 0.01°

※使用时请避免活塞捍承受回转扭力，因为有可能会造成防转块变形，导致自动开关反应异常，内部滑轨变形，进而造成增加作动阻抗。

※Avoid using the electric actuator in such a way that rotationaltorque would be applied to the piston rod
This may cause deformation of the Anti-rotating guide,abnormal responses of the auto switch, play in theinternal guide or an increase in the sliding resistance.

基本规格 Basic Specification

基本规格 Basic specification	丝杆直径(mm) Screw Diameter	12		
	丝杆精度等级 Screw accuracy class	C7		
	丝杆导程(mm) Screw lead	5	10	20
	行程范围(mm) Stroke Range	50-1000mm/50 pitch	50-1000mm/50 pitch	50-1000mm/50 pitch
	重复定位精度(mm) Repetitive accuracy	±0.01、（≥300mm) ±0.02	±0.01、（≥300mm) ±0.02	±0.01、（≥300mm) ±0.02
	丝杆额定动载荷N Screw rated dynamic load rating	5380	5430	
马达输入 The motor input	马达额定功率(W) Motor rated power	400	400	400
	马达额定转速(rpm) Motor rated speed	3000	3000	3000
	马达额定扭矩(N·M) Motor rated torque	0.32	0.32	0.32
	减速比 Reduction ratio	/	/	/
电推缸推力输出 Thrust Output	额定输出推力(N) Rated output thrust	1280	640	320
	额定推力(N) Rate thrust	1280	640	320
	额定速度（mm/s) Rated speed	250	500	1000

注： 电缸额定推力在丝杆额定动载荷与电机额定输出推力中取最小值

Note: The rated thrust of the electric cylinder is determined as the minimum value among the Screw rated dynamic load rating and the rated output thrust of the motor.

轴端安装方式 Shaft End Mounting Direction

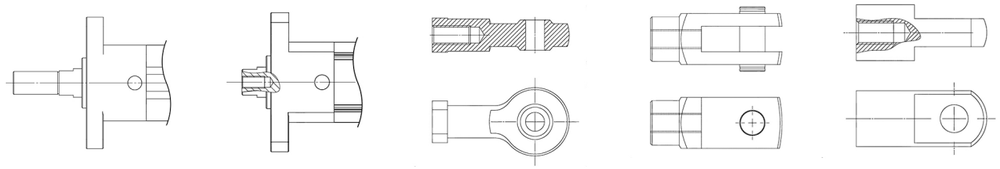

外螺纹 *ExternalThread*

内螺纹(B) *Internal thread*

杆端关节轴承(G) *Rod End*

U型叉铰(Y) *Rod Clevis*

I型叉铰(I) *Clevis Foot*

©2024 LIMON® - All rights reserved - The contents of this document are subject to change without prior notice.

马达直连型 (-S)

2D&3D文档下载请至
www.limonrobot.cn

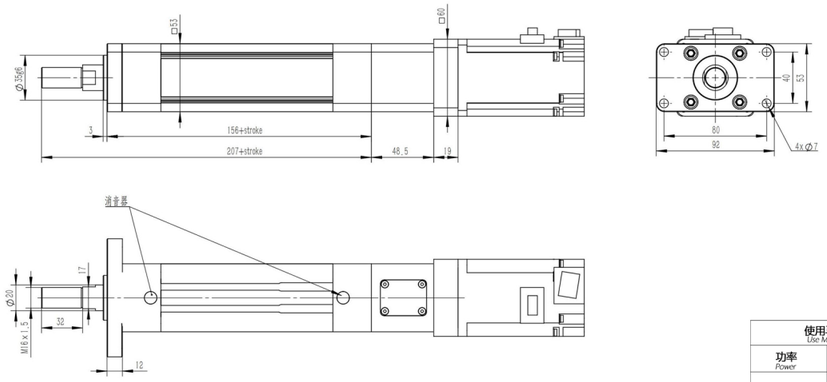

使用马达 Use Motor		PCD	连接螺钉 Connecting screw
功率 Power	品牌 Brand		
400W	三菱(M40) Mitsubishi(M40)	φ70	M5
	松下(P40) Panasonic(P40)		M4

行程(mm)Stroke	50	100	150	200	250	300	350	400	450	500
重量(kg)Weight	2.0	2.2	2.5	2.7	2.9	3.2	3.4	3.6	3.9	4.1
行程(mm)Stroke	550	600	650	700	750	800	850	900	950	1000
重量(kg)Weight	4.3	4.6	4.8	5.0	5.3	5.5	5.7	6.0	6.2	6.5

注：所有对应重量均为裸缸重量(不含减速机、电机的重量)!

马达转折型(-P)

(不可用于电缸尾部安装)

2D&3D文档下载请至
www.limonrobot.cn

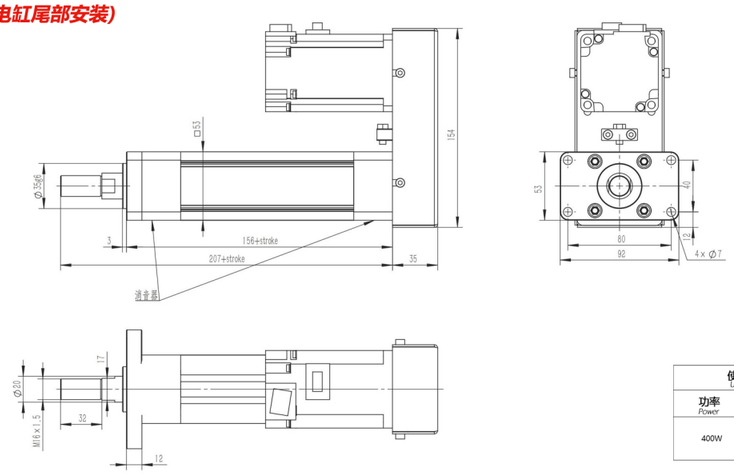

使用马达 Use Motor		PCD	连接螺钉 Connecting screw
功率 Power	品牌 Brand		
400W	三菱(M40) Mitsubishi(M40)	φ70	M5
	松下(P40) Panasonic(P40)		M4

行程(mm)Stroke	50	100	150	200	250	300	350	400	450	500
重量(kg)Weight	2.2	2.4	2.6	2.9	3.1	3.4	3.6	3.8	4.1	4.3
行程(mm)Stroke	550	600	650	700	750	800	850	900	950	1000
重量(kg)Weight	4.5	4.8	5.0	5.2	5.5	5.7	5.9	6.2	6.4	6.6

注：所有对应重量均为裸缸重量(不含减速机、电机的重量)!

转折加强型(-PJ)

(可用于电缸尾部安装)

2D&3D文档下载请至
www.limonrobot.cn

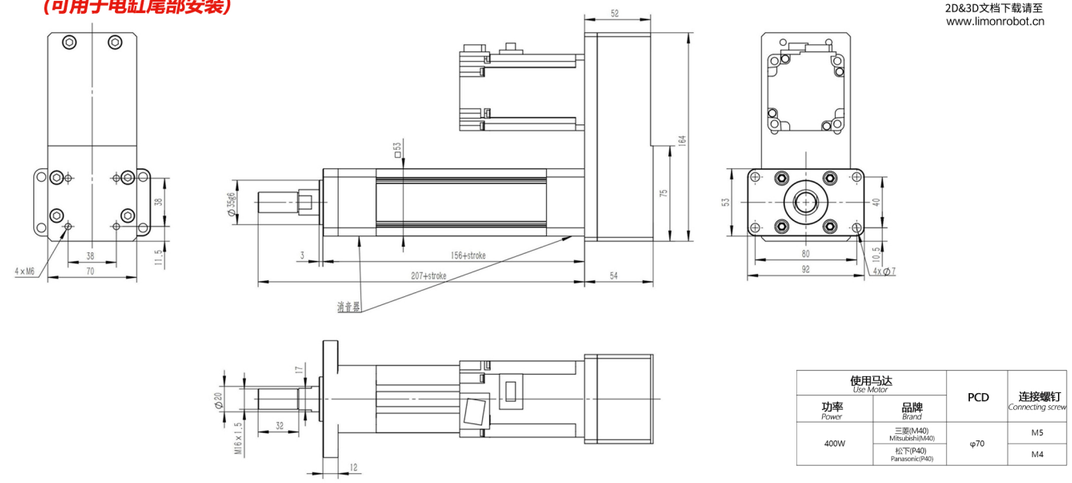

使用马达 Use Motor		PCD	连接螺钉 Connecting screw
功率 Power	品牌 Brand		
400W	三菱(M40) Mitsubishi(M40)	φ70	M5
	松下(P40) Panasonic(P40)		M4

行程(mm)Stroke	50	100	150	200	250	300	350	400	450	500
重量(kg)Weight	2.7	2.9	3.2	3.4	3.6	3.9	4.1	4.3	4.6	4.8
行程(mm)Stroke	550	600	650	700	750	800	850	900	950	1000
重量(kg)Weight	5.0	5.3	5.5	5.7	6.0	6.2	6.4	6.7	6.9	7.2

注：所有对应重量均为裸缸重量(不含减速机、电机的重量)!

©2024 LIMON® - All rights reserved - The contents of this document are subject to change without prior notice.

型号订购码 Code

LMC 50	-	1605	-	50	-	S	-	□	-	□	-	M40	-	□	-	S1
本体型号 Item No.		丝杆规格 Lead Screw Specifications		行程(mm) Stroke range		安装方式 Mounting mode		轴端安装方式 Shaft end mounting mode		本体安装方式 Body Mounting Method		马达品牌及功率 Motor brand/power		减速比 Reduction ratio		磁性开关数量 Number of agnetic Reed Switches
		1605 1610 1620		50-1200，间隔50 50-1200,gap 50		S：马达直连型 S：Motor Direct mounting P：马达转折型 P：Motor indirect mounting PJ：转折加强型注1 PJ：indirect enhance mounting		缺省：外螺纹 Default：External thread B：内螺纹 B：Internal thread G：杆端关节轴承 G：Rod end joint Y：U型叉铰 Y：Rod clevis U I：I型叉铰 I：Rod clevis I		前盖 Front Cover DX：导向架 DX：Guide Frame LB：侧法兰 LB：Side Flange TC：底面耳轴 TC：Bottom Trunnion CA：单片尾铰 CA：Single Tail Hinge CB：双片尾铰 CB：Double Tail Hinge		M40：三菱400W M40：Mitsubishi 400W M75：三菱750W M75：Mitsubishi 750W P40：松下400W P40：Panasonic 400W P75：松下750W P75：Panasonic 750W		缺省：马达直连 Default：Direct motor connection G3：3比减速 G3：3 ratio reduction G5：5比减速 G5：5 ratio reduction G10：10比减速 G10：10 ratio reduction		S1：1个 S1：1PCS S2：2个 S2：2PCS S3：3个 S3：3PCS

注1： P型为钣金罩壳，不可用于电缸尾部安装。 PJ型为高强度铝合金罩壳，可用于电缸尾部安装。
Note 1: Type P is a sheet metal cover and cannot be used for installation at the rear of the electric cylinder. PJ type is a high-strength aluminum alloy housing, which can be used for the electric cylinder tail installation.



防止回转精度 Anti-rotating Accuracy

出力杆的防止回转精度
Anti-rotatingAccuracy of Rod

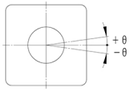

防止回转精度 Anti-rotating accuracy
± 0.01°

※使用时请避免活塞焊承受回转扭力，因为有可能会造成防转块变形，导致自动开关反应异常，内部滑轨变形，进而造成增加作动阻抗。
※Avoid using the electric actuator in such a way that rotationaltorque would be applied to the piston rod
This may cause deformation of the Anti-rotating guide,abnormal responses of the auto switch, play in theinternal guide or an increase in the sliding resistance.

基本规格 Basic Specification

基本规格 Basic specification	丝杆直径(mm) Screw Diameter	16																						
	丝杆精度等级 Screw accuracy class	C7																						
	丝杆导程(mm) Screw lead	05							10							20								
	行程范围(mm) Stroke Range	50-1200mm/50 pitch							50-1200mm/50 pitch							50-1200mm/50 pitch								
	重复定位精度(mm) Repetitive accuracy	±0.01、（≥400mm) ±0.02							±0.01、（≥400mm) ±0.02							±0.01、（≥400mm) ±0.02								
	丝杆额定动载荷N Screw rated dynamic load rating	8870							6860							4810								
马达输入 The motor input	马达额定功率(W) Motor rated power	400				750			400				750			400				750				
	马达额定转速(rpm) Motor rated speed	3000				3000			3000				3000			3000				3000				
	马达额定扭矩(N·M) Motor rated torque	1.27				2.4			1.27				2.4			1.27				2.4				
电推缸推力输出 Thrust Output	减速比 Reduction ratio	无W/O	3	5	10	无W/O	3	5	10	无W/O	3	5	10	无W/O	3	5	10	无W/O	3	5	10	无W/O	3	5	10
	额定输出推力(N) Rated output thrust	1280	3840	6400	12800	2560	7680	12800	25600	640	1920	3200	6400	1280	3840	6400	12800	320	960	1600	3200	640	1970	3200	6400
	额定推力(N) Rate thrust	1280	3840	6400	8870	2560	7680	8870	8870	640	1920	3200	6400	1280	3840	6400	6860	320	960	1600	3200	640	1970	3200	4810
	额定速度（mm/s) Rated speed	250	80	50	25	250	80	50	25	500	160	100	50	500	160	100	50	1000	320	200	100	1000	320	200	100

注： 电缸额定推力在丝杆额定动载荷与电机额定输出推力中取最小值
Note: The rated thrust of the electric cylinder is determined as the minimum value among the Screw rated dynamic load rating and the rated output thrust of the motor.

轴端安装方式 Shaft End Mounting Direction

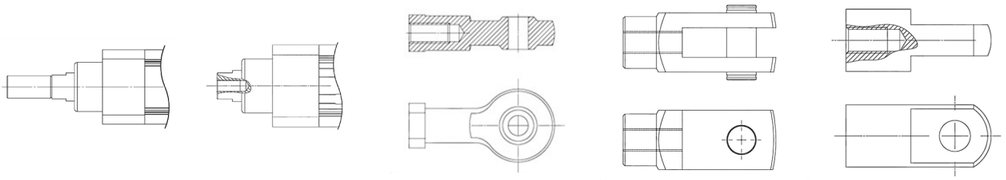

外螺纹 *ExternalThread*　　内螺纹(B) *Internal thread*　　杆端关节轴承(G) *Rod End*　　U型叉铰(Y) *Rod Clevis*　　I型叉铰(I) *Clevis Foot*

马达直连型(-S)

2D&3D文档下载请至 www.limonrobot.cn

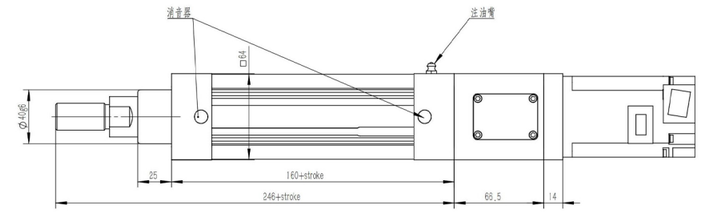

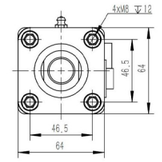

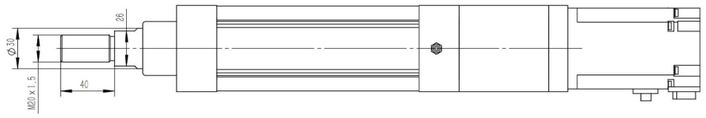

使用马达 Use Motor		PCD	连接螺钉 Connecting screw
功率 Power	品牌 Brand		
400W	三菱(M40) Mitsubishi(M40)	φ70	M5
	松下(P40) Panasonic(P40)		M4

行程(mm)Stroke	50	100	150	200	250	300	350	400	450	500	550	600
重量(kg)Weight	2.9	3.2	3.5	3.8	4.2	4.5	4.8	5.1	5.4	5.7	6.0	6.3
行程(mm)Stroke	650	700	750	800	850	900	950	1000	1050	1100	1150	1200
重量(kg)Weight	6.6	6.9	7.3	7.6	7.9	8.2	8.5	8.8	9.1	9.4	9.7	10.0

注： 所有对应重量均为裸缸重量(不含减速机、电机的重量)！

马达直连型(-S)

2D&3D文档下载请至 www.limonrobot.cn

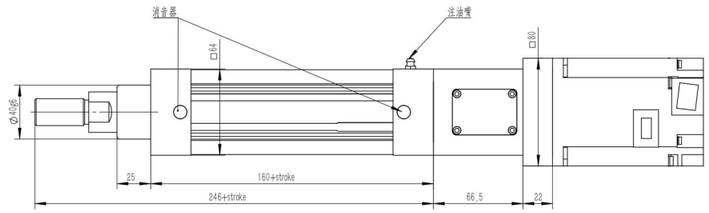

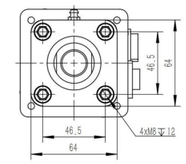

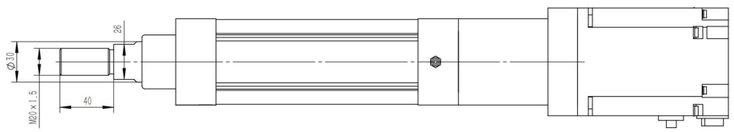

使用马达 Use Motor		PCD	连接螺钉 Connecting screw
功率 Power	品牌 Brand		
750W	三菱(M75) Mitsubishi(M75)	φ90	M6
	松下(P75) Panasonic(P75)		M5

行程(mm)Stroke	50	100	150	200	250	300	350	400	450	500	550	600
重量(kg)Weight	3.1	3.4	3.7	4.0	4.4	4.7	5.0	5.3	5.6	5.9	6.2	6.5
行程(mm)Stroke	650	700	750	800	850	900	950	1000	1050	1100	1150	1200
重量(kg)Weight	6.9	7.2	7.6	7.9	8.2	8.5	8.8	9.1	9.4	9.7	10.0	10.3

注： 所有对应重量均为裸缸重量(不含减速机、电机的重量)！

©2024 LIMON® - All rights reserved - The contents of this document are subject to change without prior notice.

马达转折型(-P)
(不可用于电缸尾部安装)

2D&3D文档下载请至 www.limonrobot.cn

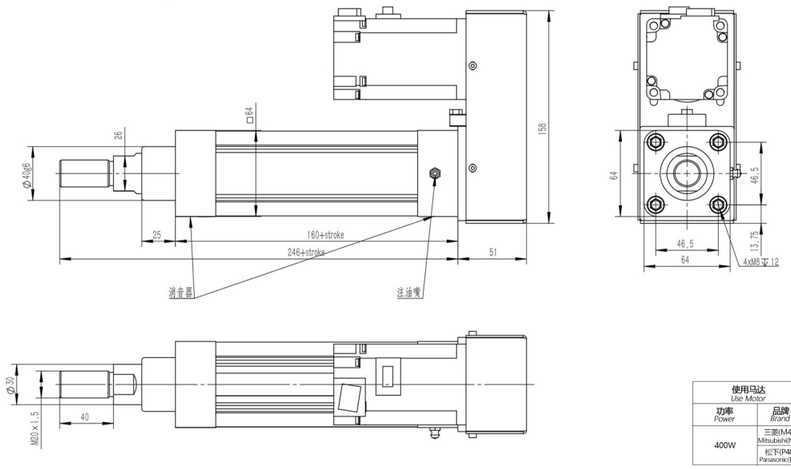

使用马达 Use Motor		PCD	连接螺钉 Connecting screw
功率 Power	品牌 Brand		
400W	三菱(M40) Mitsubishi(M40)	φ70	M5
	松下(P40) Panasonic(P40)		M4

行程(mm)Stroke	50	100	150	200	250	300	350	400	450	500	550	600
重量(kg)Weight	3.0	3.3	3.6	3.9	4.3	4.6	4.9	5.2	5.5	5.8	6.1	6.4
行程(mm)Stroke	650	700	750	800	850	900	950	1000	1050	1100	1150	1200
重量(kg)Weight	6.7	7.0	7.4	7.7	8.0	8.3	8.6	8.9	9.2	9.5	9.8	10.1

注：所有对应重量均为裸缸重量(不含减速机、电机的重量)!

转折加强型(-PJ)
(可用于电缸尾部安装)

2D&3D文档下载请至 www.limonrobot.cn

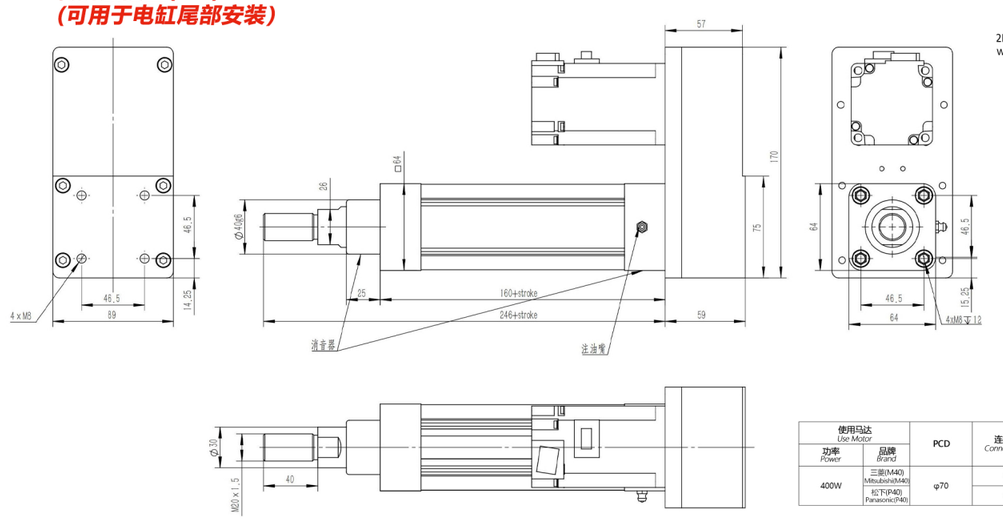

使用马达 Use Motor		PCD	连接螺钉 Connecting screw
功率 Power	品牌 Brand		
400W	三菱(M40) Mitsubishi(M40)	φ70	M5
	松下(P40) Panasonic(P40)		M4

行程(mm)Stroke	50	100	150	200	250	300	350	400	450	500	550	600
重量(kg)Weight	3.9	4.2	4.5	4.8	5.1	5.4	5.7	6.0	6.3	6.7	7.0	7.3
行程(mm)Stroke	650	700	750	800	850	900	950	1000	1050	1100	1150	1200
重量(kg)Weight	7.6	7.9	8.2	8.5	8.8	9.1	9.4	9.8	10.1	10.4	10.7	11.0

注：所有对应重量均为裸缸重量(不含减速机、电机的重量)!

马达转折型(-P)
(不可用于电缸尾部安装)

2D&3D文档下载请至 www.limonrobot.cn

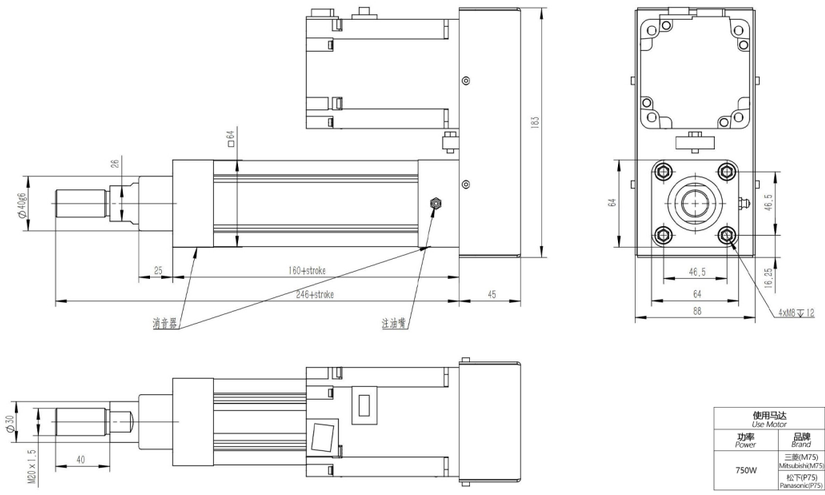

使用马达 Use Motor		PCD	连接螺钉 Connecting screw
功率 Power	品牌 Brand		
750W	三菱(M75) Mitsubishi(M75)	φ90	M6
	松下(P75) Panasonic(P75)		M5

行程(mm)Stroke	50	100	150	200	250	300	350	400	450	500	550	600
重量(kg)Weight	3.2	3.5	3.8	4.1	4.5	4.8	5.1	5.4	5.7	6.0	6.3	6.6
行程(mm)Stroke	650	700	750	800	850	900	950	1000	1050	1100	1150	1200
重量(kg)Weight	6.9	7.2	7.6	7.9	8.2	8.5	8.8	9.1	9.4	9.7	10.0	10.3

注：所有对应重量均为裸缸重量(不含减速机、电机的重量)!

转折加强型(-PJ)
(可用于电缸尾部安装)

2D&3D文档下载请至 www.limonrobot.cn

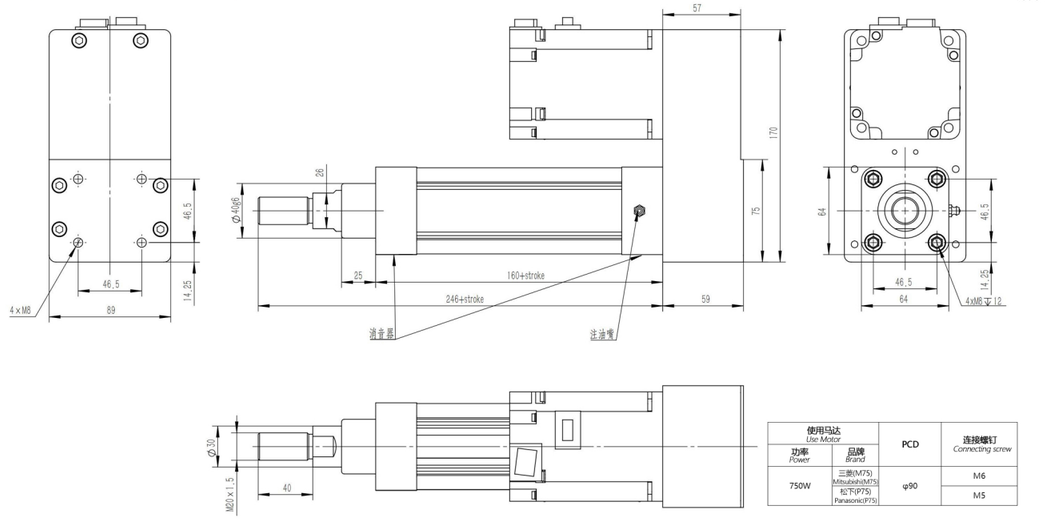

使用马达 Use Motor		PCD	连接螺钉 Connecting screw
功率 Power	品牌 Brand		
750W	三菱(M75) Mitsubishi(M75)	φ90	M6
	松下(P75) Panasonic(P75)		M5

行程(mm)Stroke	50	100	150	200	250	300	350	400	450	500	550	600
重量(kg)Weight	3.9	4.2	4.5	4.8	5.1	5.4	5.7	6.0	6.3	6.7	7.0	7.3
行程(mm)Stroke	650	700	750	800	850	900	950	1000	1050	1100	1150	1200
重量(kg)Weight	7.6	7.9	8.2	8.5	8.8	9.1	9.4	9.8	10.1	10.4	10.7	11.0

注：所有对应重量均为裸缸重量(不含减速机、电机的重量)!

©2024 LIMON® - All rights reserved - The contents of this document are subject to change without prior notice.

型号订购码 Code

LMC 50S - 1605 - 50 - S - □ - □ - M40 - □ - S1

本体型号 Item No.	丝杆规格 Lead Screw Specifications	行程(mm) Stroke range	安装方式 Mounting mode	轴端安装方式 Shaft end mounting mode	本体安装方式 Body Mounting Method	马达品牌及功率 Motor brand/power	减速比 Reduction ratio	磁性开关数量 Number of agnetic Reed Switches
LMC 50S	1605	50-1200，间隔50 50-1200,gap 50	S：马达直连型 S：Motor Direct mounting	缺省：外螺纹 Default：External thred	前盖 Front Cover	M40：三菱400W M40：Mitsubishi 400W	缺省：马达直连 Default：Direct motor connection	S1：1个 S1：1PCS
	1610		P：马达转折型 P：Motor indirect mounting	B：内螺纹 B：Internal thread	DX：导向架 DX：Guide Frame	M75：三菱750W M75：Mitsubishi 750W	G3：3比减速 G3：3 ratio reduction	S2：2个 S2：2PCS
	1620		PJ：转折加强型注1 PJ：Indirect enhance mounting	G：杆端关节轴承 G：Rod end joint	LB：侧法兰 LB：Side Flange	P40：松下400W P40：Panasonic 400W	G5：5比减速 G5：5 ratio reduction	S3：3个 S3：3PCS
				Y：U型叉铰 Y：Rod clevis U	TC：底面耳轴 TC：Bottom Trunnion	P75：松下750W P75：Panasonic 750W	G10：10比减速 G10：10 ratio reduction	
				I：I型叉铰 I：Rod clevis I	CA：单片尾铰 CA：Single Tail Hinge			
					CB：双片尾铰 CB：Double Tail Hinge			

注1： P型为钣金罩壳，不可用于电缸尾部安装。 PJ型为高强度铝合金罩壳，可用于电缸尾部安装。
Note 1: Type P is a sheet metal cover and cannot be used for installation at the rear of the electric cylinder. PJ type is a high-strength aluminum alloy housing, which can be used for the electric cylinder tail installation.

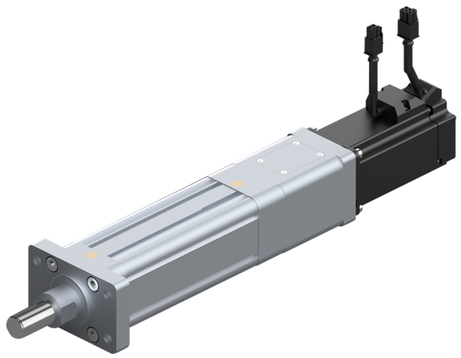

防止回转精度 Anti-rotating Accuracy

出力杆的防止回转精度
Anti-rotatingAccuracy of Rod

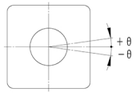

防止回转精度 Anti-rotating accuracy
± 0.01°

※使用时请避免活塞捍承受回转扭力，因为有可能会造成防转块变形，导致自动开关反应异常，内部滑轨变形，进而造成增加作动阻抗。
※Avoid using the electric actuator in such a way that rotationaltorque would be applied to the piston rod
This may cause deformation of the Anti-rotating guide,abnormal responses of the auto switch, play in theinternal guide or an increase in the sliding resistance.

基本规格 Basic Specification

基本规格 Basic specification	丝杆直径(mm) Screw Diameter	16																					
	丝杆精度等级 Screw accuracy class	C7																					
	丝杆导程(mm) Screw lead	05							10							20							
	行程范围(mm) Stroke Range	50-1200mm/50 pitch							50-1200mm/50 pitch							50-1200mm/50 pitch							
	重复定位精度(mm) Repetitive accuracy	±0.01、（≥400mm) ±0.02							±0.01、（≥400mm) ±0.02							±0.01、（≥400mm) ±0.02							
	丝杆额定动载荷N Screw rated dynamic load rating	8870							6860							4810							
马达输入 The motor input	马达额定功率(W) Motor rated power	400				750			400				750			400				750			
	马达额定转速(rpm) Motor rated speed	3000				3000			3000				3000			3000				3000			
	马达额定扭矩(N-M) Motor rated torque	1.27				2.4			1.27				2.4			1.27				2.4			
电推缸推力输出 Thrust Output	减速比 Reduction ratio	无W/O	3	5	10	无W/O	3	5	10	无W/O	3	5	10	无W/O	3	5	10	无W/O	3	5	10	无W/O	3	5	10
	额定输出推力(N) Rated output thrust	1280	3840	6400	12800	2560	7680	12800	25600	640	1920	3200	6400	1280	3840	6400	12800	320	960	1600	3200	640	1970	3200	6400
	额定推力(N) Rate thrust	1280	3840	6400	8870	2560	7680	8870	8870	640	1920	3200	6400	1280	3840	6400	6860	320	960	1600	3200	640	1970	3200	4810
	额定速度（mm/s) Rated speed	250	80	50	25	250	80	50	25	500	160	100	50	500	160	100	50	1000	80	50	25	250	80	50	25

注： 电缸额定推力在丝杆额定动载荷与电机额定输出推力中取最小值
Note: The rated thrust of the electric cylinder is determined as the minimum value among the Screw rated dynamic load rating and the rated output thrust of the motor.

轴端安装方式 Shaft End Mounting Direction

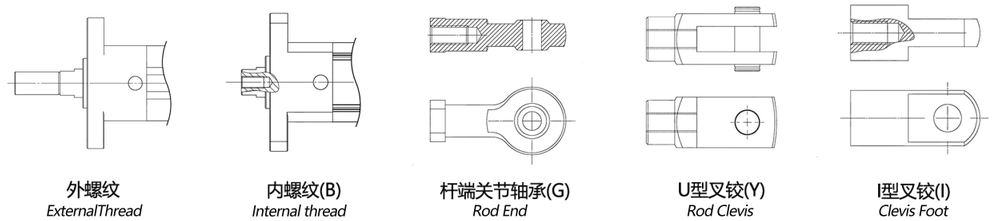

外螺纹 *ExternalThread*
内螺纹(B) *Internal thread*
杆端关节轴承(G) *Rod End*
U型叉铰(Y) *Rod Clevis*
I型叉铰(I) *Clevis Foot*

马达直连型(-S)

2D&3D文档下载请至 ot.cn

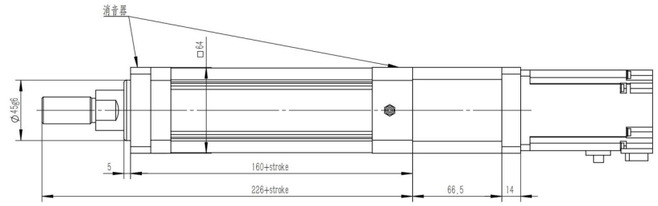

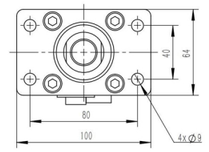

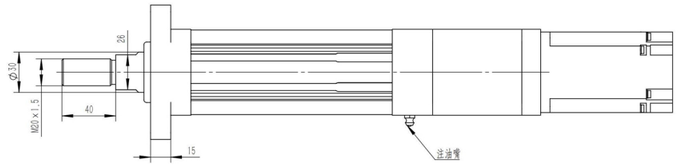

使用马达 Use Motor		PCD	连接螺钉 Connecting screw
功率 Power	品牌 Brand		
400W	三菱(M40) Mitsubishi(M40)	φ70	M5
	松下(P40) Panasonic(P40)		M4

行程(mm)Stroke	50	100	150	200	250	300	350	400	450	500	550	600
重量(kg)Weight	3.0	3.3	3.6	3.9	4.2	4.5	4.9	5.2	5.5	5.8	6.1	6.4
行程(mm)Stroke	650	700	750	800	850	900	950	1000	1050	1100	1150	1200
重量(kg)Weight	6.7	7.0	7.3	7.6	8.0	8.3	8.6	8.9	9.2	9.5	9.8	10.1

注： 所有对应重量均为裸缸重量(不含减速机、电机的重量)！

马达直连型(-S)

2D&3D文档下载请至 www.limonrobot.cn

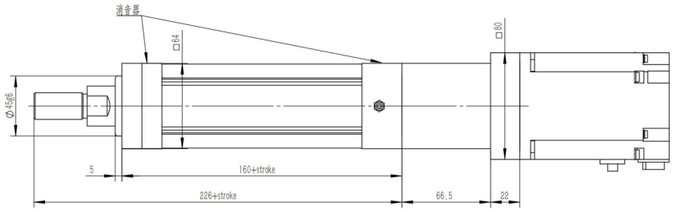

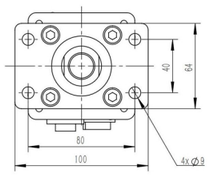

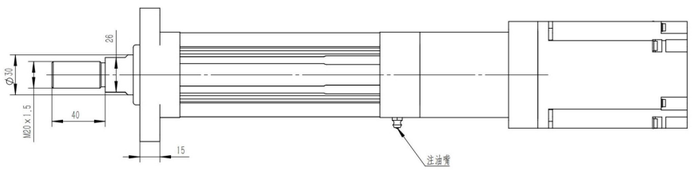

使用马达 Use Motor		PCD	连接螺钉 Connecting screw
功率 Power	品牌 Brand		
750W	三菱(M75) Mitsubishi(M75)	φ90	M6
	松下(P75) Panasonic(P75)		M5

行程(mm)Stroke	50	100	150	200	250	300	350	400	450	500	550	600
重量(kg)Weight	3.2	3.5	3.8	4.1	4.4	4.7	5.1	5.4	5.7	6.0	6.3	6.6
行程(mm)Stroke	650	700	750	800	850	900	950	1000	1050	1100	1150	1200
重量(kg)Weight	7.0	7.3	7.6	7.9	8.3	8.6	8.9	9.2	9.5	9.8	10.1	10.4

注： 所有对应重量均为裸缸重量(不含减速机、电机的重量)！

©2024 LIMON® - All rights reserved - The contents of this document are subject to change without prior notice.

马达转折型(-P)
(不可用于电缸尾部安装)

2D&3D文档下载请至
www.limonrobot.cn

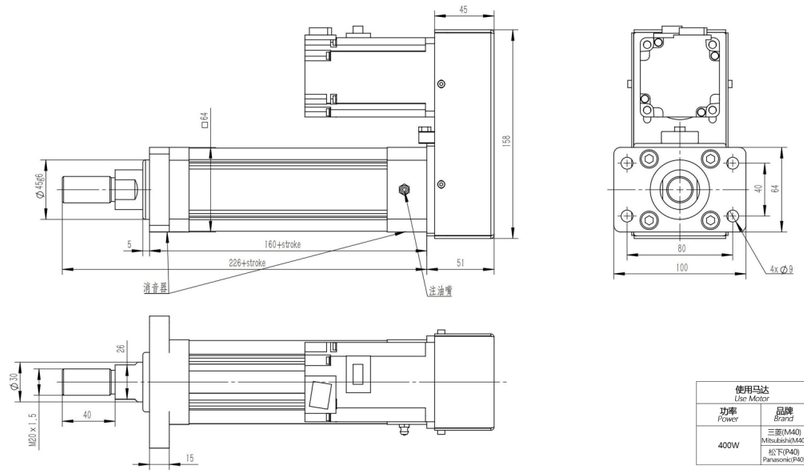

使用马达 Use Motor		PCD	连接螺钉 Connecting screw
功率 Power	品牌 Brand		
400W	三菱(M40) Mitsubishi(M40)	φ70	M5
	松下(P40) Panasonic(P40)		M4

行程(mm)Stroke	50	100	150	200	250	300	350	400	450	500	550	600
重量(kg)Weight	3.1	3.4	3.7	4.0	4.3	4.6	5.0	5.3	5.6	5.9	6.2	6.5
行程(mm)Stroke	650	700	750	800	850	900	950	1000	1050	1100	1150	1200
重量(kg)Weight	6.8	7.1	7.4	7.7	8.1	8.4	8.7	9.0	9.3	9.6	9.9	10.2

注： 所有对应重量均为裸缸重量(不含减速机、电机的重量)!

马达转折型(-P)
(不可用于电缸尾部安装)

2D&3D文档下载请至
www.limonrobot.cn

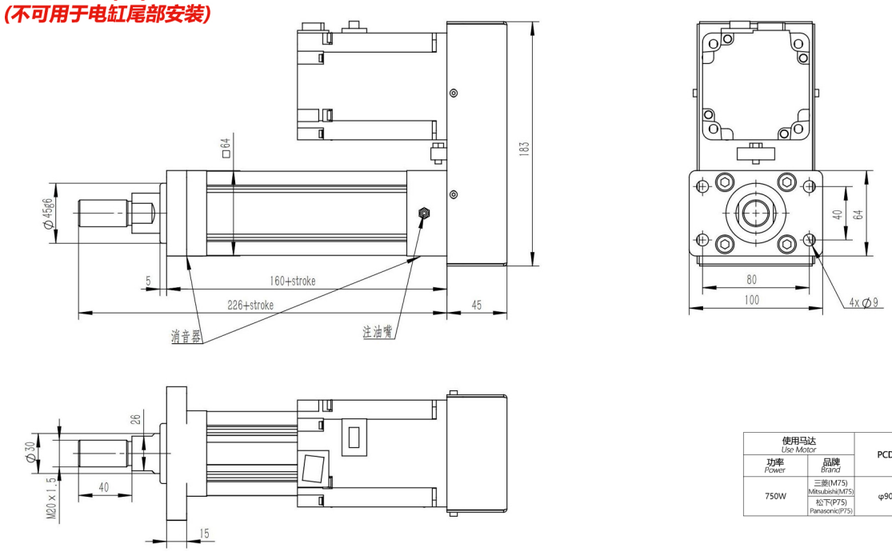

使用马达 Use Motor		PCD	连接螺钉 Connecting screw
功率 Power	品牌 Brand		
750W	三菱(M75) Mitsubishi(M75)	φ90	M6
	松下(P75) Panasonic(P75)		M5

行程(mm)Stroke	50	100	150	200	250	300	350	400	450	500	550	600
重量(kg)Weight	3.3	3.6	3.9	4.2	4.5	4.8	5.2	5.5	5.8	6.1	6.4	6.7
行程(mm)Stroke	650	700	750	800	850	900	950	1000	1050	1100	1150	1200
重量(kg)Weight	7.0	7.3	7.6	7.9	8.3	8.6	8.9	9.2	9.5	9.8	10.1	10.4

注： 所有对应重量均为裸缸重量(不含减速机、电机的重量)!

转折加强型(-PJ)
(可用于电缸尾部安装)

2D&3D文档下载请至
www.limonrobot.cn

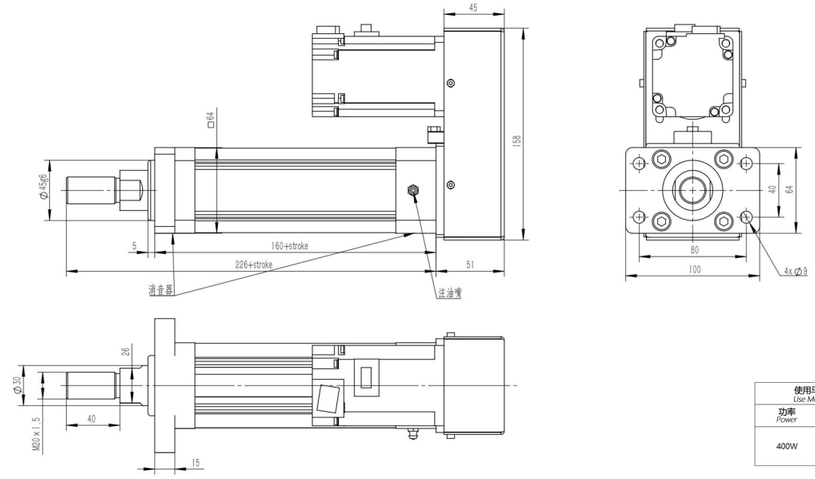

使用马达 Use Motor		PCD	连接螺钉 Connecting screw
功率 Power	品牌 Brand		
400W	三菱(M40) Mitsubishi(M40)	φ70	M5
	松下(P40) Panasonic(P40)		M4

行程(mm)Stroke	50	100	150	200	250	300	350	400	450	500	550	600
重量(kg)Weight	3.9	4.3	4.6	4.9	5.2	5.5	5.8	6.1	6.4	6.7	7.0	7.4
行程(mm)Stroke	650	700	750	800	850	900	950	1000	1050	1100	1150	1200
重量(kg)Weight	7.7	8.0	8.3	8.6	8.9	9.2	9.5	9.8	10.1	10.5	10.8	11.1

注： 所有对应重量均为裸缸重量(不含减速机、电机的重量)!

转折加强型(-PJ)
(可用于电缸尾部安装)

2D&3D文档下载请至
www.limonrobot.cn

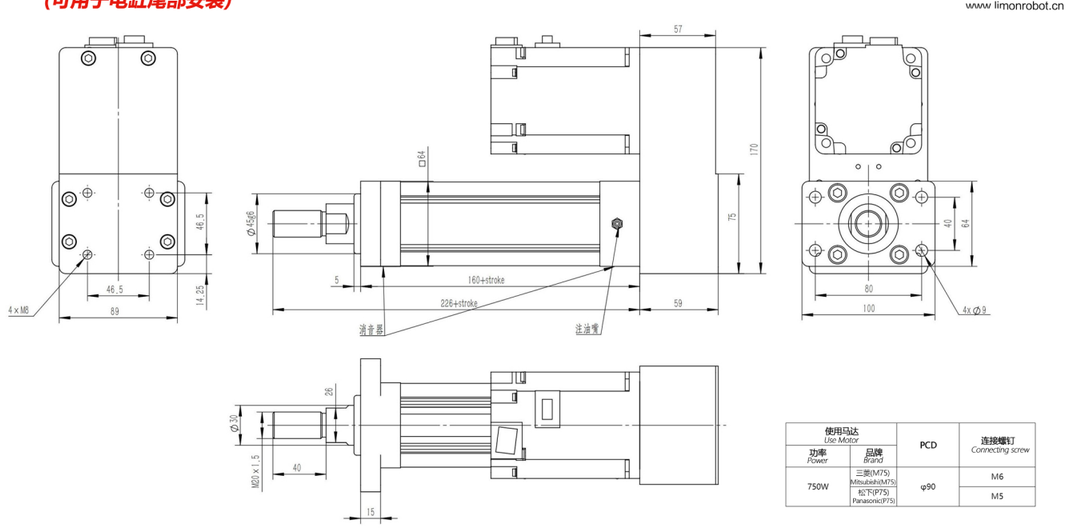

使用马达 Use Motor		PCD	连接螺钉 Connecting screw
功率 Power	品牌 Brand		
750W	三菱(M75) Mitsubishi(M75)	φ90	M6
	松下(P75) Panasonic(P75)		M5

行程(mm)Stroke	50	100	150	200	250	300	350	400	450	500	550	600
重量(kg)Weight	3.9	4.3	4.6	4.9	5.2	5.5	5.8	6.1	6.4	6.7	7.0	7.4
行程(mm)Stroke	650	700	750	800	850	900	950	1000	1050	1100	1150	1200
重量(kg)Weight	7.7	8.0	8.3	8.6	8.9	9.2	9.5	9.8	10.1	10.5	10.8	11.1

注： 所有对应重量均为裸缸重量(不含减速机、电机的重量)!

©2024 LIMON® - All rights reserved - The contents of this document are subject to change without prior notice.

型号订购码 Code

LMC 63	-	2005	-	50	-	S	-	□	-	□	-	M75	-	□	-	S1
本体型号 Item No.		丝杆规格 Lead Screw Specifications		行程(mm) Stroke range		安装方式 Mounting mode		轴端安装方式 Shaft end mounting mode		本体安装方式 Body Mounting Method		马达品牌及功率 Motor brand/power		减速比 Reduction ratio		磁性开关数量 Number of agnetic Reed Switches
		2005 2010 2020 2505 2510 2525		50-1500，间隔50 50-1500,gap 50		S：马达直连型 S：Motor Direct mounting P：马达转折型 P：Motor indirect mounting PJ：转折加强型注1 PJ：Indirect enhance mounting		缺省：外螺纹 Default：External thred B：内螺纹 B：Internal thread G：杆端关节轴承 G：Rod end joint Y：U型叉铰 Y：Rod clevis U I：I型叉铰 I：Rod clevis I		前盖 Front Cover DX：导向架 DX：Guide Frame LB：侧法兰 LB：Side Flange TC：底面耳轴 TC：Bottom Trunnion CA：单片尾铰 CA：Single Tail Hinge CB：双片尾铰 CB：Double Tail Hinge		M75：三菱750W M75：Mitsubishi 750W P75：松下750W P75：Panasonic 750W		缺省：马达直连 Default：Direct motor connection G3：3比减速 G3：3 ratio reduction G5：5比减速 G5：5 ratio reduction G10：10比减速 G10：10 ratio reduction		S1：1个 S1：1PCS S2：2个 S2：2PCS S3：3个 S3：3PCS

注1： P型为钣金罩壳，不可用于电缸尾部安装。 PJ型为高强度铝合金罩壳，可用于电缸尾部安装。

Note 1: Type P is a sheet metal cover and cannot be used for installation at the rear of the electric cylinder. PJ type is a high-strength aluminum alloy housing, which can be used for the electric cylinder tail installation.



防止回转精度 Anti-rotating Accuracy

出力杆的防止回转精度
Anti-rotatingAccuracy of Rod

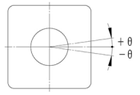

防止回转精度 Anti-rotating accuracy
± 0.01°

※使用时请避免活塞焊承受回转扭力，因为有可能会造成防转块变形，导致自动开关反应异常，内部滑轨变形，进而造成增加作动阻抗。

※Avoid using the electric actuator in such a way that rotationaltorque would be applied to the piston rod
This may cause deformation of the Anti-rotating guide,abnormal responses of the auto switch, play in theinternal guide or an increase in the sliding resistance.

基本规格 Basic Specification

基本规格 Basic specification	丝杆直径(mm) Screw Diameter	20										25											
	丝杆精度等级 Screw accuracy class	C7										C7											
	丝杆导程(mm) Screw lead	5				10				20			5				10				25		
	行程范围(mm) Stroke Range	50-1500 mm/50 pitch				50-1500 mm/50 pitch				50-1500 mm/50 pitch			50-1500 mm/50 pitch				50-1500 mm/50 pitch				50-1500 mm/50 pitch		
	重复定位精度(mm) Repetitive accuracy	±0.01、（≥300mm) ±0.02				±0.01、（≥300mm) ±0.02				±0.01、（≥300mm) ±0.02			±0.01、（≥300mm) ±0.02				±0.01、（≥300mm) ±0.02				±0.01、（≥300mm) ±0.02		
	丝杆额定动载荷N Screw rated dynamic load rating	12010				12060				9410			13190				13220				10330		
马达输入 The motor input	马达额定功率(W) Motor rated power	750				750				750			750				750				750		
	马达额定转速(rpm) Motor rated speed	3000				3000				3000			3000				3000				3000		
	马达额定扭矩(N·M) Motor rated torque	2.4				2.4				2.4			2.4				2.4				2.4		
	减速比 Reduction ratio	无W/O	3	5	10	无W/O	3	5	10	无W/O	3	5	10	无W/O	3	5	10	无W/O	3	5	10	无W/O	3	5	10
	额定输出推力(N) Rated output thrust	2560	7680	12800	25600	1280	3840	6400	12800	640	1970	3200	6400	2560	7680	12800	25600	1280	3840	6400	12800	640	1970	3200	6400
电推缸推力输出 Thrust Output	额定推力(N) Rate thrust	2560	7680	12010	12010	1280	3840	6400	12060	640	1970	3200	6400	2560	7680	12800	13190	1280	3840	6400	12060	640	1970	3200	6400
	额定速度（mm/s) Rated speed	250	80	50	25	500	160	100	50	1000	320	200	100	250	80	50	25	500	160	100	50	1250	400	250	125

注： 电缸额定推力在丝杆额定动载荷与电机额定输出推力中取最小值

Note: The rated thrust of the electric cylinder is determined as the minimum value among the Screw rated dynamic load rating and the rated output thrust of the motor.

轴端安装方式 Shaft End Mounting Direction

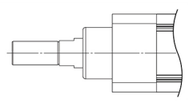

外螺纹 *ExternalThread*

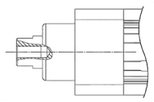

内螺纹(B) *Internal thread*

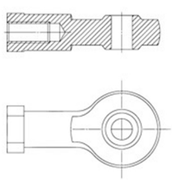

杆端关节轴承(G) *Rod End*

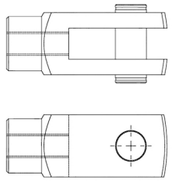

U型叉铰(Y) *Rod Clevis*

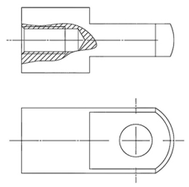

I型叉铰(I) *Clevis Foot*

马达直连型(-S)

2D&3D文档下载请至 www.limonrobot.cn

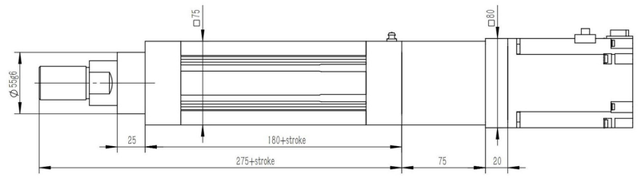

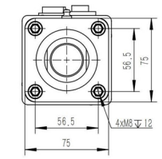

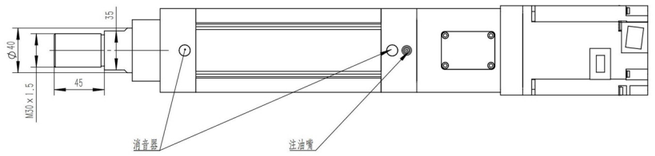

使用马达 Use Motor		PCD	连接螺钉 Connecting screw
功率 Power	品牌 Brand		
750W	三菱(M75) Mitsubishi(M75)	φ90	M6
	松下(P75) Panasonic(P75)		M5

行程(mm)Stroke	50	100	150	200	250	300	350	400	450	500	550	600	650	700	750
重量(kg)Weight	4.2	4.6	5.0	5.5	5.9	6.3	6.7	7.1	7.5	7.9	8.3	8.7	9.1	9.6	10.0
行程(mm)Stroke	800	850	900	950	1000	1050	1100	1150	1200	1250	1300	1350	1400	1450	1500
重量(kg)Weight	10.4	10.8	11.2	11.6	12.0	12.4	12.8	13.2	13.7	14.1	14.5	14.9	15.3	15.7	16.1

注： 所有对应重量均为裸缸重量(不含减速机、电机的重量)！

马达直连型(-S)

2D&3D文档下载请至 www.limonrobot.cn

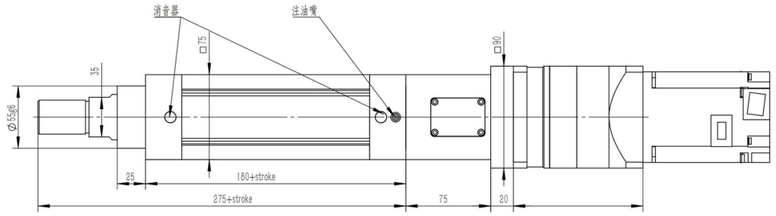

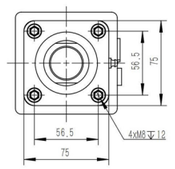

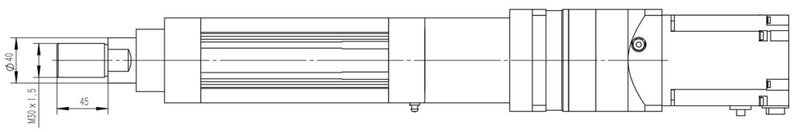

使用马达 Use Motor		PCD	连接螺钉 Connecting screw
功率 Power	品牌 Brand		
750W	三菱(M75) Mitsubishi(M75)	φ90	M6
	松下(P75) Panasonic(P75)		M5

行程(mm)Stroke	50	100	150	200	250	300	350	400	450	500	550	600	650	700	750
重量(kg)Weight	4.2	4.6	5.0	5.5	5.9	6.3	6.7	7.1	7.5	7.9	8.3	8.7	9.1	9.6	10.0
行程(mm)Stroke	800	850	900	950	1000	1050	1100	1150	1200	1250	1300	1350	1400	1450	1500
重量(kg)Weight	10.4	10.8	11.2	11.6	12.0	12.4	12.8	13.2	13.7	14.1	14.5	14.9	15.3	15.7	16.1

注： 所有对应重量均为裸缸重量(不含减速机、电机的重量)！

©2024 LIMON® - All rights reserved - The contents of this document are subject to change without prior notice.

马达转折型(-P)
(不可用于电缸尾部安装)

2D&3D文档下载请至 www.limonrobot.cn

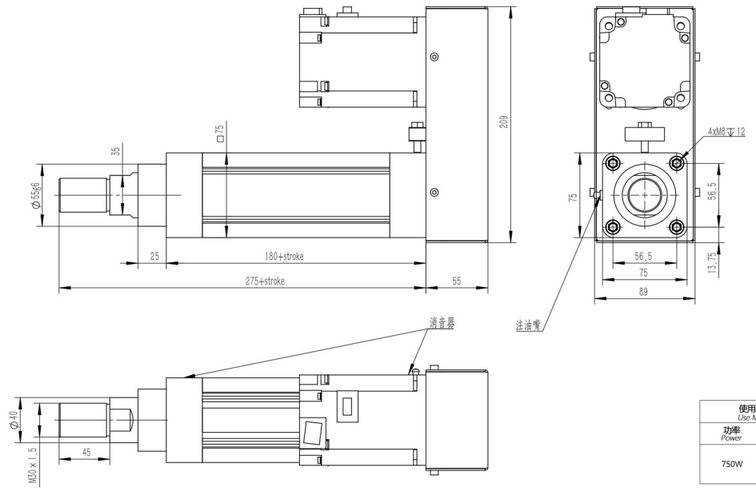

使用马达 Use Motor		PCD	连接螺钉 Connecting screw
功率 Power	品牌 Brand		
750W	三菱(M75) Mitsubishi(M75)	φ90	M6
	松下(P75) Panasonic(P75)		M5

行程(mm)Stroke	50	100	150	200	250	300	350	400	450	500	550	600	650	700	750
重量(kg)Weight	4.5	4.9	5.3	5.7	6.1	6.5	6.9	7.3	7.7	8.2	8.6	9.0	9.4	9.8	10.2
行程(mm)Stroke	800	850	900	950	1000	1050	1100	1150	1200	1250	1300	1350	1400	1450	1500
重量(kg)Weight	10.6	11.0	11.4	11.8	12.3	12.7	13.1	13.5	13.9	14.3	14.7	15.1	15.5	15.9	16.4

注： 所有对应重量均为裸缸重量(不含减速机、电机的重量)!

马达转折型(-P)
(不可用于电缸尾部安装)

2D&3D文档下载请至 www.limonrobot.cn

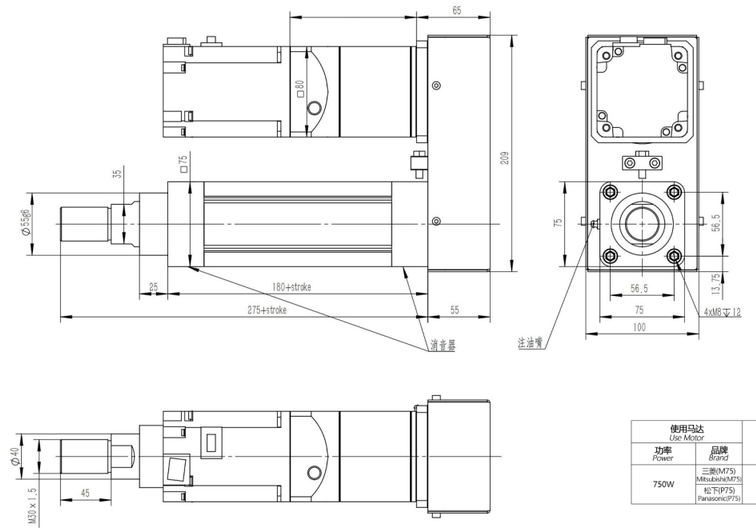

使用马达 Use Motor		PCD	连接螺钉 Connecting screw
功率 Power	品牌 Brand		
750W	三菱(M75) Mitsubishi(M75)	φ90	M6
	松下(P75) Panasonic(P75)		M5

行程(mm)Stroke	50	100	150	200	250	300	350	400	450	500	550	600	650	700	750
重量(kg)Weight	4.5	4.9	5.3	5.7	6.1	6.5	6.9	7.3	7.7	8.2	8.6	9.0	9.4	9.8	10.2
行程(mm)Stroke	800	850	900	950	1000	1050	1100	1150	1200	1250	1300	1350	1400	1450	1500
重量(kg)Weight	10.6	11.0	11.4	11.8	12.3	12.7	13.1	13.5	13.9	14.3	14.7	15.1	15.5	15.9	16.4

注： 所有对应重量均为裸缸重量(不含减速机、电机的重量)!

转折加强型(-PJ)
(可用于电缸尾部安装)

D&3D文档下载请至 www.limonrobot.cn

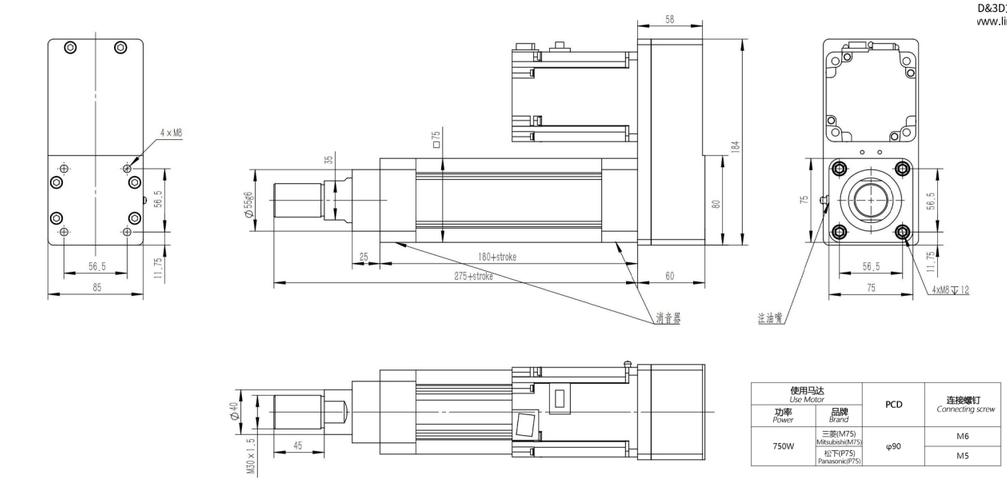

使用马达 Use Motor		PCD	连接螺钉 Connecting screw
功率 Power	品牌 Brand		
750W	三菱(M75) Mitsubishi(M75)	φ90	M6
	松下(P75) Panasonic(P75)		M5

行程(mm)Stroke	50	100	150	200	250	300	350	400	450	500	550	600	650	700	750
重量(kg)Weight	4.9	5.3	5.7	6.2	6.6	7.0	7.4	7.8	8.2	8.6	9.0	9.4	9.8	10.3	10.7
行程(mm)Stroke	800	850	900	950	1000	1050	1100	1150	1200	1250	1300	1350	1400	1450	1500
重量(kg)Weight	11.1	11.5	11.9	12.3	12.7	13.1	13.5	13.9	14.4	14.8	15.2	15.6	16.0	16.4	16.8

注： 所有对应重量均为裸缸重量(不含减速机、电机的重量)!

转折加强型(-PJ)
(可用于电缸尾部安装)

2D&3D文档下载请至 www.limonrobot.cn

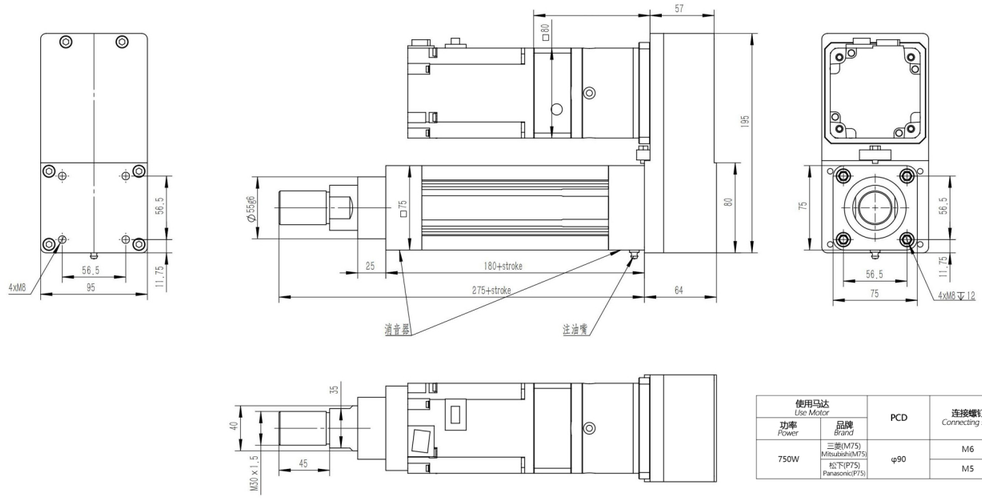

使用马达 Use Motor		PCD	连接螺钉 Connecting screw
功率 Power	品牌 Brand		
750W	三菱(M75) Mitsubishi(M75)	φ90	M6
	松下(P75) Panasonic(P75)		M5

行程(mm)Stroke	50	100	150	200	250	300	350	400	450	500	550	600	650	700	750
重量(kg)Weight	4.9	5.3	5.7	6.2	6.6	7.0	7.4	7.8	8.2	8.6	9.0	9.4	9.8	10.3	10.7
行程(mm)Stroke	800	850	900	950	1000	1050	1100	1150	1200	1250	1300	1350	1400	1450	1500
重量(kg)Weight	11.1	11.5	11.9	12.3	12.7	13.1	13.5	13.9	14.4	14.8	15.2	15.6	16.0	16.4	16.8

注： 所有对应重量均为裸缸重量(不含减速机、电机的重量)!

©2024 LIMON® - All rights reserved - The contents of this document are subject to change without prior notice.

型号订购码 Code

LMC 63S	- 2005	- 50	- S	- □	- □	- M75	- □	- S1
本体型号 Item No.	丝杆规格 Lead Screw Specifications	行程(mm) Stroke range	安装方式 Mounting mode	轴端安装方式 Shaft end mounting mode	本体安装方式 Body Mounting Method	马达品牌及功率 Motor brand/power	减速比 Reduction ratio	磁性开关数量 Number of agnetic Reed Switches
	2005 2010 2020 2505 2510 2525	50-1000，间隔50 50-1000,gap 50	S：马达直连型 S：Motor Direct mounting P：马达转折型 P：Motor indirect mounting PJ：转折加强型 PJ：Indirect enhance mounting	缺省：外螺纹 Default：External thread B：内螺纹 B：Internal thread G：杆端关节轴承 G：Rod end joint Y：U型叉铰 Y：Rod clevis U I：I型叉铰 I：Rod clevis I	前盖 Front Cover DX：导向架 DX：Guide Frame LB：侧法兰 LB：Side Flange TC：底面耳轴 TC：Bottom Trunnion CA：单片尾铰 CA：Single Tail Hinge CB：双片尾铰 CB：Double Tail Hinge	M75：三菱750W M75：Mitsubishi 750W P75：松下750W P75：Panasonic 750W	缺省：马达直连 Default：Direct motor connection G3：3比减速 G3：3-ratio reduction G5：5比减速 G5：5-ratio reduction G10：10比减速 G10：10-ratio reduction	S1：1个 S1：1PCS S2：2个 S2：2PCS S3：3个 S3：3PCS

注1： P型为钣金罩壳，不可用于电缸尾部安装。 PJ型为高强度铝合金罩壳，可用于电缸尾部安装。

Note 1: Type P is a sheet metal cover and cannot be used for installation at the rear of the electric cylinder. PJ type is a high-strength aluminum alloy housing, which can be used for the electric cylinder tail installation.

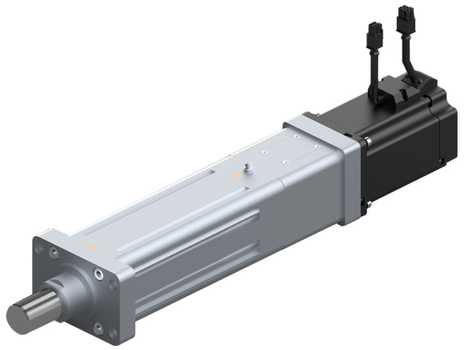

防止回转精度 Anti-rotating Accuracy

出力杆的防止回转精度
Anti-rotatingAccuracy of Rod

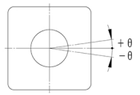

防止回转精度 Anti-rotating accuracy
± 0.01°

※使用时请避免活塞捍承受回转扭力，因为有可能会造成防转块变形，导致自动开关反应异常，内部滑轨变形，进而造成增加作动阻抗。

※Avoid using the electric actuator in such a way that rotationaltorque would be applied to the piston rod
This may cause deformation of the Anti-rotating guide,abnormal responses of the auto switch, play in theinternal guide or an increase in the sliding resistance.

基本规格 Basic Specification

基本规格 Basic specification	丝杆直径(mm) Screw Diameter	20										25											
	丝杆精度等级 Screw accuracy class	C7										C7											
	丝杆导程(mm) Screw lead	5			10				20				5				10				25		
	行程范围(mm) Stroke Range	50-1500 mm/50 pitch			50-1500 mm/50 pitch				50-1500 mm/50 pitch				50-1500 mm/50 pitch				50-1500 mm/50 pitch				50-1500 mm/50 pitch		
	重复定位精度(mm) Repetitive accuracy	±0.01、（≥300mm) ±0.02			±0.01、（≥300mm) ±0.02				±0.01、（≥300mm) ±0.02				±0.01、（≥300mm) ±0.02				±0.01、（≥300mm) ±0.02				±0.01、（≥300mm) ±0.02		
	丝杆额定动载荷N Screw rated dynamic load rating	12010			12060				9410				13190				13220				10330		
马达输入 The motor input	马达额定功率(W) Motor rated power	750			750				750				750				750				750		
	马达额定转速(rpm) Motor rated speed	3000			3000				3000				3000				3000				3000		
	马达额定扭矩(N-M) Motor rated torque	2.4			2.4				2.4				2.4				2.4				2.4		
电推缸推力输出 Thrust Output	减速比 Reduction ratio	无W/O	3	5	10	无W/O	3	5	10	无W/O	3	5	10	无W/O	3	5	10	无W/O	3	5	10	无W/O	3	5	10
	额定输出推力(N) Rated output thrust	2560	7680	12800	25600	1280	3840	6400	12800	640	1970	3200	6400	2560	7680	12800	25600	1280	3840	6400	12800	640	1970	3200	6400
	额定推力(N) Rate thrust	2560	7680	12010	12010	1280	3840	6400	12060	640	1970	3200	6400	2560	7680	12800	13190	1280	3840	6400	12060	640	1970	3200	6400
	额定速度（mm/s) Rated speed	250	80	50	25	500	160	100	50	1000	320	200	100	250	80	50	25	500	160	100	50	1250	400	250	125

注： 电缸额定推力在丝杆额定动载荷与电机额定输出推力中取最小值

Note: The rated thrust of the electric cylinder is determined as the minimum value among the Screw rated dynamic load rating and the rated output thrust of the motor.

轴端安装方式 Shaft End Mounting Direction

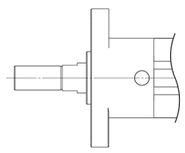

外螺纹
ExternalThread

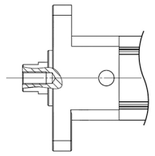

内螺纹(B)
Internal thread

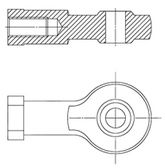

杆端关节轴承(G)
Rod End

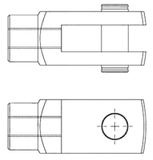

U型叉铰(Y)
Rod Clevis

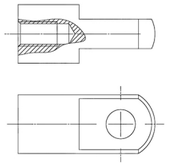

I型叉铰(I)
Clevis Foot

马达直连型(-S)

2D&3D文档下载请至 www.limonrobot.cn

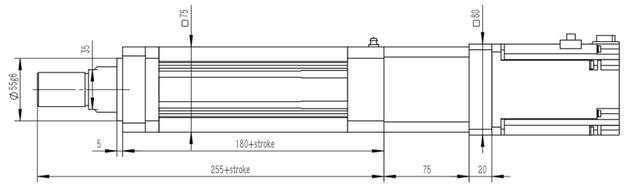

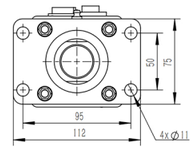

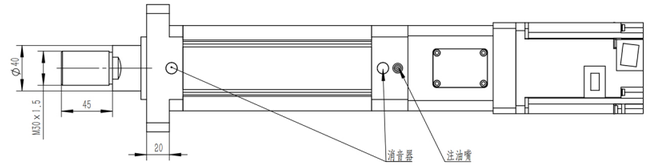

使用马达 Use Motor		PCD	连接螺钉 Connecting screw
功率 Power	品牌 Brand		
750W	三菱(M75) Mitsubishi(M75)	φ90	M6
	松下(P75) Panasonic(P75)		M5

行程(mm)Stroke	50	100	150	200	250	300	350	400	450	500	550	600	650	700	750
重量(kg)Weight	4.3	4.7	5.1	5.5	5.9	6.3	6.7	7.1	7.6	8.0	8.4	8.8	9.2	9.6	10.0
行程(mm)Stroke	800	850	900	950	1000	1050	1100	1150	1200	1250	1300	1350	1400	1450	1500
重量(kg)Weight	10.4	10.8	11.2	11.7	12.1	12.5	12.9	13.3	13.7	14.1	14.5	14.9	15.3	15.8	16.2

注： 所有对应重量均为裸缸重量(不含减速机、电机的重量)！

马达直连型(-S)

2D&3D文档下载请至 www.limonrobot.cn

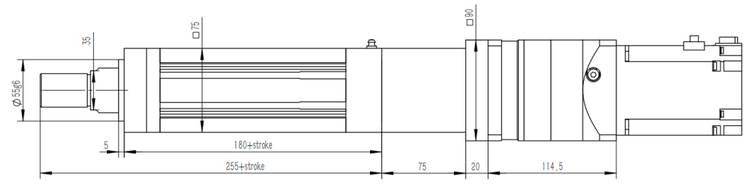

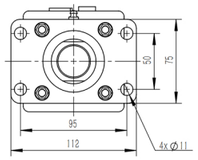

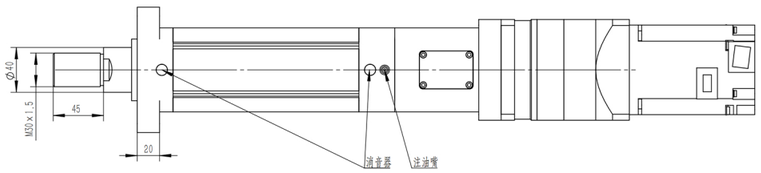

使用马达 Use Motor		PCD	连接螺钉 Connecting screw
功率 Power	品牌 Brand		
750W	三菱(M75) Mitsubishi(M75)	φ90	M6
	松下(P75) Panasonic(P75)		M5

行程(mm)Stroke	50	100	150	200	250	300	350	400	450	500	550	600	650	700	750
重量(kg)Weight	4.3	4.7	5.1	5.5	5.9	6.3	6.7	7.1	7.6	8.0	8.4	8.8	9.2	9.6	10.0
行程(mm)Stroke	800	850	900	950	1000	1050	1100	1150	1200	1250	1300	1350	1400	1450	1500
重量(kg)Weight	10.4	10.8	11.2	11.7	12.1	12.5	12.9	13.3	13.7	14.1	14.5	14.9	15.3	15.8	16.2

注： 所有对应重量均为裸缸重量(不含减速机、电机的重量)！

©2024 LIMON® - All rights reserved - The contents of this document are subject to change without prior notice.

马达转折型(-P)
(不可用于电缸尾部安装)

2D&3D文档下载请至
www.limonrobot.cn

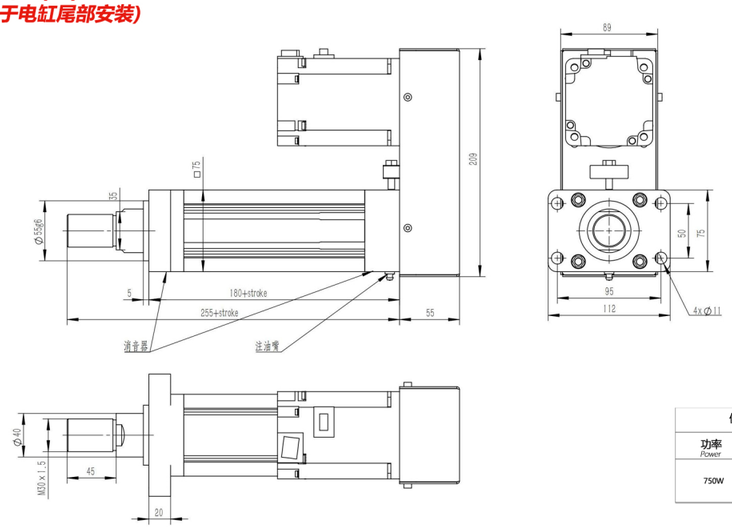

使用马达 Use Motor		PCD	连接螺钉 Connecting screw
功率 Power	品牌 Brand		
750W	三菱(M75) Mitsubishi(M75)	φ90	M6
	松下(P75) Panasonic(P75)		M5

行程(mm)Stroke	50	100	150	200	250	300	350	400	450	500	550	600	650	700	750
重量(kg)Weight	4.5	4.9	5.3	5.7	6.2	6.6	7.0	7.4	7.8	8.2	8.6	9.0	9.4	9.8	10.3
行程(mm)Stroke	800	850	900	950	1000	1050	1100	1150	1200	1250	1300	1350	1400	1450	1500
重量(kg)Weight	10.7	11.1	11.5	11.9	12.3	12.7	13.1	13.5	13.9	14.4	14.8	15.2	15.6	16.0	16.4

注：所有对应重量均为裸缸重量(不含减速机、电机的重量)!

转折加强型(-PJ)
(可用于电缸尾部安装)

2D&3D文档下载请至
www.limonrobot.cn

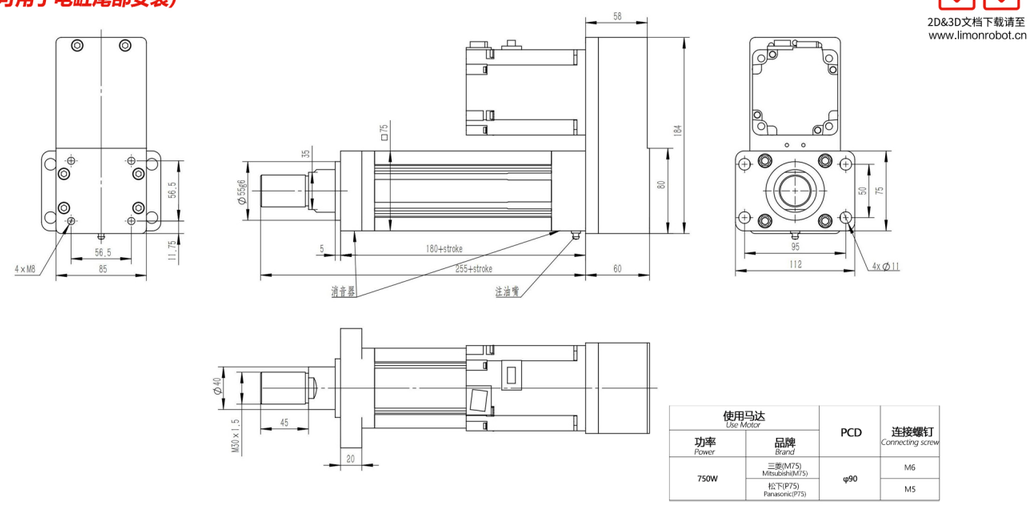

使用马达 Use Motor		PCD	连接螺钉 Connecting screw
功率 Power	品牌 Brand		
750W	三菱(M75) Mitsubishi(M75)	φ90	M6
	松下(P75) Panasonic(P75)		M5

行程(mm)Stroke	50	100	150	200	250	300	350	400	450	500	550	600	650	700	750
重量(kg)Weight	5.0	5.4	5.8	6.2	6.6	7.0	7.4	7.8	8.3	8.7	9.1	9.5	9.9	10.3	10.7
行程(mm)Stroke	800	850	900	950	1000	1050	1100	1150	1200	1250	1300	1350	1400	1450	1500
重量(kg)Weight	11.1	11.5	11.9	12.4	12.8	13.2	13.6	14.0	14.4	14.8	15.2	15.6	16.0	16.5	16.9

注：所有对应重量均为裸缸重量(不含减速机、电机的重量)!

LMC63S(短型)系列
LMC63S (Short form)series

马达转折型(-P)
(不可用于电缸尾部安装)

2D&3D文档下载请至
www.limonrobot.cn

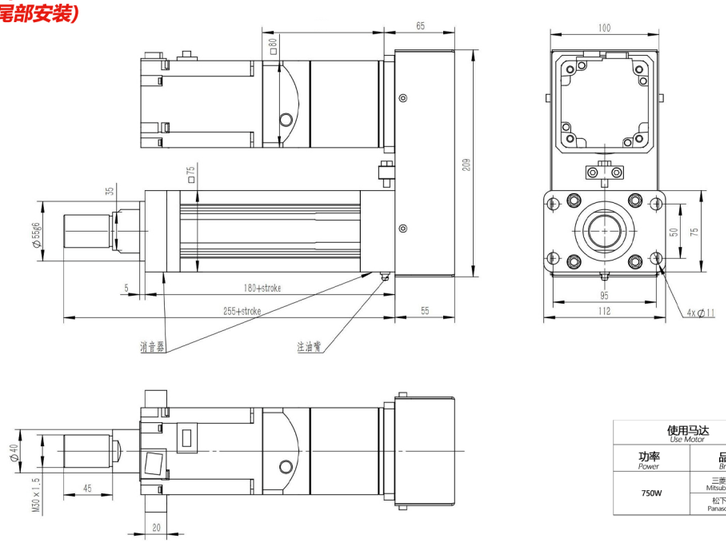

使用马达 Use Motor		PCD	连接螺钉 Connecting screw
功率 Power	品牌 Brand		
750W	三菱(M75) Mitsubishi(M75)	φ90	M6
	松下(P75) Panasonic(P75)		M5

行程(mm)Stroke	50	100	150	200	250	300	350	400	450	500	550	600	650	700	750
重量(kg)Weight	4.5	4.9	5.3	5.7	6.2	6.6	7.0	7.4	7.8	8.2	8.6	9.0	9.4	9.8	10.3
行程(mm)Stroke	800	850	900	950	1000	1050	1100	1150	1200	1250	1300	1350	1400	1450	1500
重量(kg)Weight	10.7	11.1	11.5	11.9	12.3	12.7	13.1	13.5	13.9	14.4	14.8	15.2	15.6	16.0	16.4

注：所有对应重量均为裸缸重量(不含减速机、电机的重量)!

转折加强型(-PJ)
(可用于电缸尾部安装)

2D&3D文档下载请至
www.limonrobot.cn

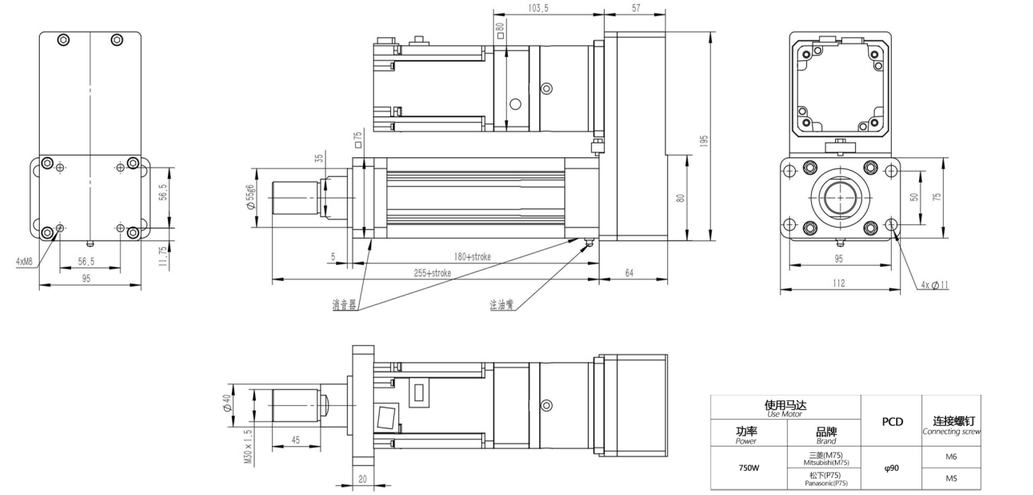

使用马达 Use Motor		PCD	连接螺钉 Connecting screw
功率 Power	品牌 Brand		
750W	三菱(M75) Mitsubishi(M75)	φ90	M6
	松下(P75) Panasonic(P75)		M5

行程(mm)Stroke	50	100	150	200	250	300	350	400	450	500	550	600	650	700	750
重量(kg)Weight	5.0	5.4	5.8	6.2	6.6	7.0	7.4	7.8	8.3	8.7	9.1	9.5	9.9	10.3	10.7
行程(mm)Stroke	800	850	900	950	1000	1050	1100	1150	1200	1250	1300	1350	1400	1450	1500
重量(kg)Weight	11.1	11.5	11.9	12.4	12.8	13.2	13.6	14.0	14.4	14.8	15.2	15.6	16.0	16.5	16.9

注：所有对应重量均为裸缸重量(不含减速机、电机的重量)!

©2024 LIMON® - All rights reserved - The contents of this document are subject to change without prior notice.

型号订购码 Code

LMC 80 -	3210 -	50 -	S -	□ -	□ -	M1KH -	□ -	S1
本体型号 Item No.	丝杆规格 Lead Screw Specifications	行程(mm) Stroke range	安装方式 Mounting mode	轴端安装方式 Shaft end mounting mode	本体安装方式 Body Mounting Method	马达品牌及功率 Motor brand/power	减速比 Reduction ratio	磁性开关数量 Number of agnetic Reed Switches
	2505 2510 2525 3205 3210 3220	50-1500，间隔50 50-1500,gap 50	S：马达直连型 S：Motor Direct mounting P：马达转折型 P：Motor Indirect mounting PJ：转折加强型 注1 PJ：Indirect enhance mounting	缺省：外螺纹 Default：External thred B：内螺纹 B：Internal thread G：杆端关节轴承 G：Rod end joint Y：U型叉铰 Y：Rod clevis U I：I型叉铰 I：Rod clevis I	前盖 Front Cover DX：导向架 DX：Guide Frame LB：侧法兰 LB：Side Flange TC：底面耳轴 TC：Bottom Trunnion CA：单片尾铰 CA：Single Tail Hinge CB：双片尾铰 CB：Double Tail Hinge	M1KH：三菱1000W M1KH：Mitsubishi 1000W P1KH：松下1000W P1KH：Panasonic 1000W	缺省：马达直连 Default：Direct motor connection G3：3比减速 G3：3-ratio reduction G5：5比减速 G5：5-ratio reduction G10：10比减速 G10：10-ratio reduction	S1：1个 S1：1PCS S2：2个 S2：2PCS S3：3个 S3：3PCS

注1： P型为钣金罩壳，不可用于电缸尾部安装。 PJ型为高强度铝合金罩壳，可用于电缸尾部安装。

Note 1: Type P is a sheet metal cover and cannot be used for installation at the rear of the electric cylinder. PJ type is a high-strength aluminum alloy housing, which can be used for the electric cylinder tail installation.

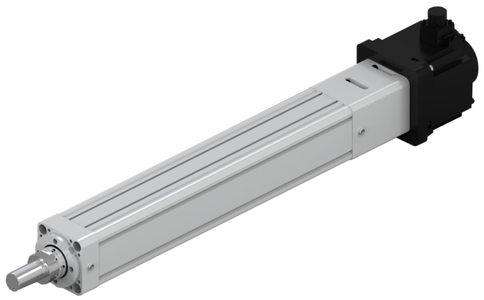

防止回转精度 Anti-rotating Accuracy

出力杆的防止回转精度
Anti-rotatingAccuracy of Rod

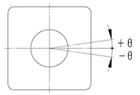

防止回转精度 Anti-rotating accuracy
±0.01°

※使用时请避免活塞焊承受回转扭力，因为有可能会造成防转块变形，导致自动开关反应异常，内部滑轨变形，进而造成增加作动阻抗。

※*Avoid using the electric actuator in such a way that rotationaltorque would be applied to the piston rod*
This may cause deformation of the Anti-rotating guide,abnormal responses of the auto switch, play in theinternal guide or an increase in the sliding resistance.

基本规格 Basic Specification

基本规格 Basic specification	丝杆直径(mm) Screw Diameter	25								32											
	丝杆精度等级 Screw accuracy class	C7								C7											
	丝杆导程(mm) Screw lead	5				10				25				5				10			
	行程范围(mm) Stroke Range	50-1500 mm/50 pitch				50-1500 mm/50 pitch				50-1500 mm/50 pitch				50-1500 mm/50 pitch				50-1500 mm/50 pitch			
	重复定位精度(mm) Repetitive accuracy	±0.01、（≥300mm) ±0.02				±0.01、（≥300mm) ±0.02				±0.01、（≥300mm) ±0.02				±0.01、（≥300mm) ±0.02				±0.01、（≥300mm) ±0.02			
	丝杆额定动载荷N Screw rated dynamic load rating	13190				13220				10330				14640				19930			
马达输入 The motor input	马达额定功率(W) Motor rated powe	750				750				750				1000				1000			
	马达额定转速(rpm) Motor rated speed	3000				3000				3000				2000				2000			
	马达额定扭矩(N-M) Motor rated torque	2.4				2.4				2.4				4.78				4.78			
	减速比 Reduction ratio	无W/O	3	5	10	无W/O	3	5	10	无W/O	3	5	10	无W/O	3	5	10	无W/O	3	5	10
	额定输出推力(N) Rated output thrust	2560	7680	12800	25600	1280	3840	6400	12800	640	1970	3200	6400	4800	14500	24200	48500	2550	7650	12700	25500	1270	3820	6370	12700
电推缸推力输出 Thrust Output	额定推力(N) Rate thrust	2560	7680	12800	13190	1280	3840	6400	12060	640	1970	3200	6400	4800	14500	14640	14640	2550	7650	12700	19930	1270	3820	6370	12700
	额定速度（mm/s) Rated speed	250	80	50	25	500	160	100	50	1250	400	250	125	250	80	50	25	500	150	100	50	1000	320	200	100

注： 电缸额定推力在丝杆额定动载荷与电机额定输出推力中取最小值

Note: The rated thrust of the electric cylinder is determined as the minimum value among the Screw rated dynamic load rating and the rated output thrust of the motor.

轴端安装方式 Shaft End Mounting Direction

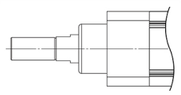

外螺纹
ExternalThread

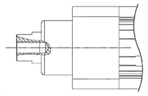

内螺纹(B)
Internal thread

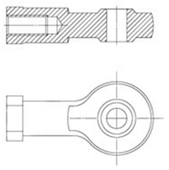

杆端关节轴承(G)
Rod End

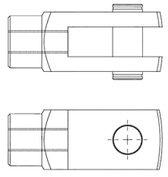

U型叉铰(Y)
Rod Clevis

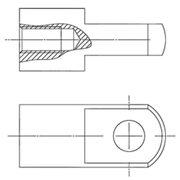

I型叉铰(I)
Clevis Foot

马达直连型(-S)

2D&3D文档下载请至 www.limonrobot.cn

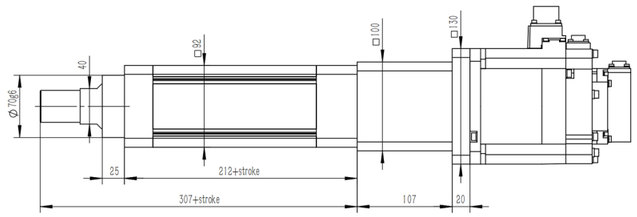

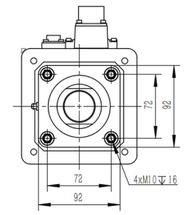

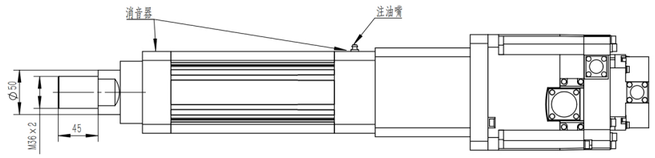

使用马达 Use Motor		PCD	连接螺钉 Connecting screw
功率 Power	品牌 Brand		
1000W	三菱(M1KH) Mitsubishi(M1KH) 松下(P1KH) Panasonic(P1KH)	φ145	M8

行程(mm)Stroke	50	100	150	200	250	300	350	400	450	500	550	600	650	700	750
重量(kg)Weight	10.3	11.0	11.8	12.5	13.3	14.0	14.8	15.5	16.3	17.0	17.8	18.5	19.3	20.0	20.8
行程(mm)Stroke	800	850	900	950	1000	1050	1100	1150	1200	1250	1300	1350	1400	1450	1500
重量(kg)Weight	21.5	22.3	23.0	23.8	24.5	25.3	26.0	26.8	27.5	28.3	29.0	29.8	30.5	31.3	32.0

注： 所有对应重量均为裸缸重量(不含减速机、电机的重量)！

马达直连型

2D&3D文档下载请至 www.limonrobot.cn

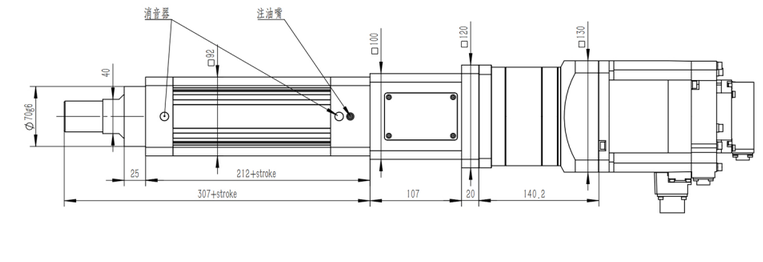

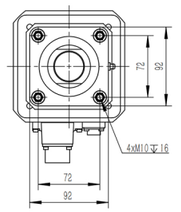

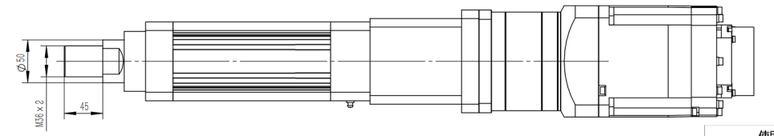

使用马达 Use Motor		PCD	连接螺钉 Connecting screw
功率 Power	品牌 Brand		
1000W	三菱(M1KH) Mitsubishi(M1KH) 松下(P1KH) Panasonic(P1KH)	φ145	M8

行程(mm)Stroke	50	100	150	200	250	300	350	400	450	500	550	600	650	700	750
重量(kg)Weight	10.3	11.0	11.8	12.5	13.3	14.0	14.8	15.5	16.3	17.0	17.8	18.5	19.3	20.0	20.8
行程(mm)Stroke	800	850	900	950	1000	1050	1100	1150	1200	1250	1300	1350	1400	1450	1500
重量(kg)Weight	21.5	22.3	23.0	23.8	24.5	25.3	26.0	26.8	27.5	28.3	29.0	29.8	30.5	31.3	32.0

注： 所有对应重量均为裸缸重量(不含减速机、电机的重量)！

©2024 LIMON® - All rights reserved - The contents of this document are subject to change without prior notice.

马达转折型(-P)
(不可用于电缸尾部安装)

2D&3D文档下载请至
www.limonrobot.cn

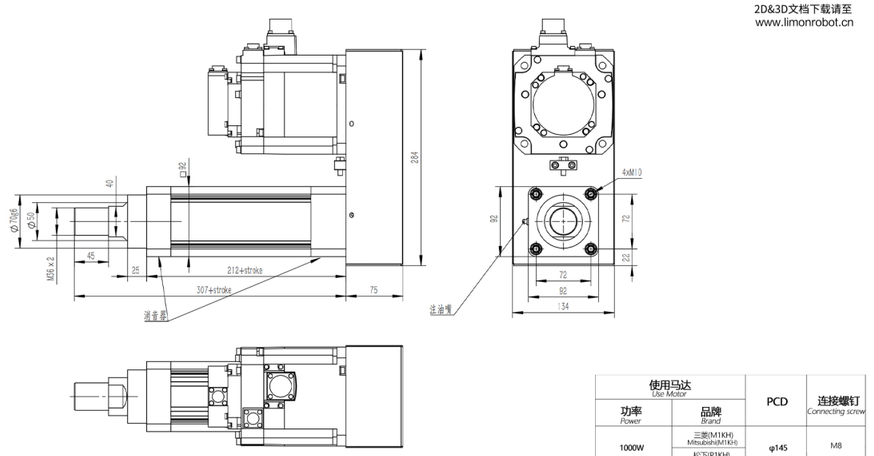

使用马达 Use Motor		PCD	连接螺钉 Connecting screw
功率 Power	品牌 Brand		
1000W	三菱(M1KH) Mitsubishi(M1KH)	φ145	M8
	松下(P1KH) Panasonic(P1KH)		

行程(mm)Stroke	50	100	150	200	250	300	350	400	450	500	550	600	650	700	750
重量(kg)Weight	10.5	11.2	12.0	12.7	13.5	14.2	15.0	15.7	16.5	17.2	18.0	18.7	19.5	20.2	21.0
行程(mm)Stroke	800	850	900	950	1000	1050	1100	1150	1200	1250	1300	1350	1400	1450	1500
重量(kg)Weight	21.7	22.5	23.2	24.0	24.7	25.5	26.2	27.0	27.7	28.5	29.2	30.0	30.7	31.5	32.2

注：所有对应重量均为裸缸重量(不含减速机、电机的重量)!

转折加强型(-PJ)
(可用于电缸尾部安装)

2D&3D文档下载请至
www.limonrobot.cn

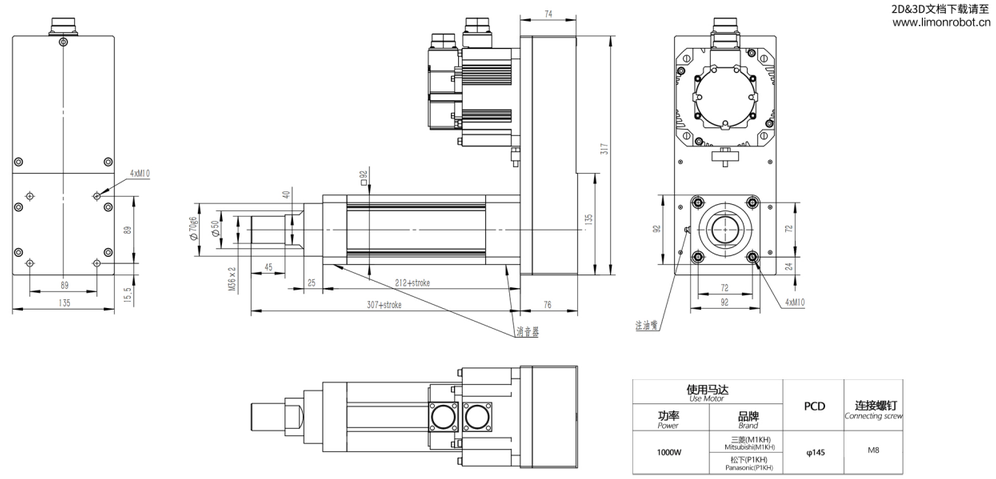

使用马达 Use Motor		PCD	连接螺钉 Connecting screw
功率 Power	品牌 Brand		
1000W	三菱(M1KH) Mitsubishi(M1KH)	φ145	M8
	松下(P1KH) Panasonic(P1KH)		

行程(mm)Stroke	50	100	150	200	250	300	350	400	450	500	550	600	650	700	750
重量(kg)Weight	12.7	13.4	14.2	14.9	15.7	16.4	17.2	17.9	18.7	19.4	20.2	20.9	21.7	22.4	23.2
行程(mm)Stroke	800	850	900	950	1000	1050	1100	1150	1200	1250	1300	1350	1400	1450	1500
重量(kg)Weight	23.9	24.7	25.4	26.2	26.9	27.7	28.4	29.2	29.9	30.7	31.4	32.2	32.9	33.7	34.4

注：所有对应重量均为裸缸重量(不含减速机、电机的重量)!

马达转折型(-P)
(不可用于电缸尾部安装)

2D&3D文档下载请至
www.limonrobot.cn

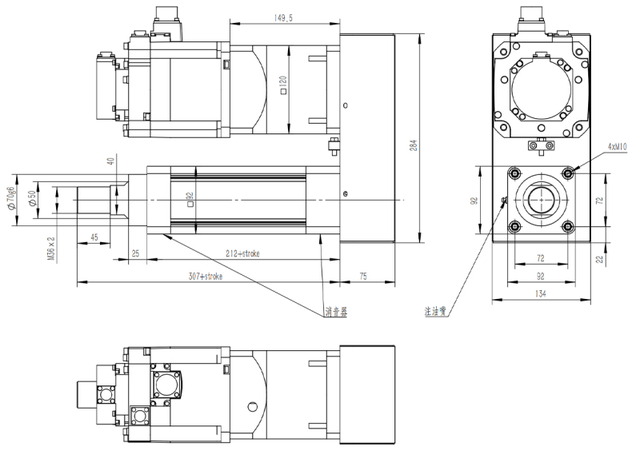

使用马达 Use Motor		PCD	连接螺钉 Connecting screw
功率 Power	品牌 Brand		
1000W	三菱(M1KH) Mitsubishi(M1KH)	φ145	M8
	松下(P1KH) Panasonic(P1KH)		

行程(mm)Stroke	50	100	150	200	250	300	350	400	450	500	550	600	650	700	750
重量(kg)Weight	10.5	11.2	12.0	12.7	13.5	14.2	15.0	15.7	16.5	17.2	18.0	18.7	19.5	20.2	21.0
行程(mm)Stroke	800	850	900	950	1000	1050	1100	1150	1200	1250	1300	1350	1400	1450	1500
重量(kg)Weight	21.7	22.5	23.2	24.0	24.7	25.5	26.2	27.0	27.7	28.5	29.2	30.0	30.7	31.5	32.2

注：所有对应重量均为裸缸重量(不含减速机、电机的重量)!

转折加强型(-PJ)
(可用于电缸尾部安装)

2D&3D文档下载请至
www.limonrobot.cn

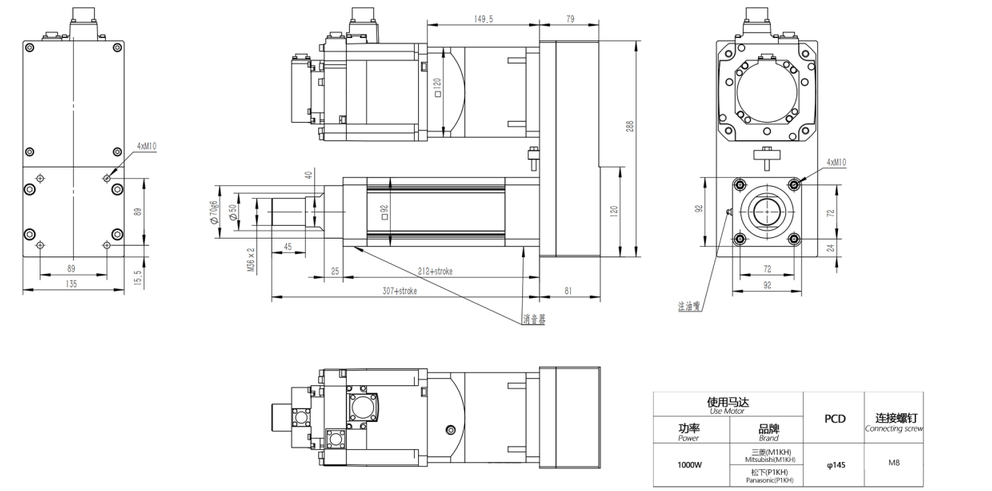

使用马达 Use Motor		PCD	连接螺钉 Connecting screw
功率 Power	品牌 Brand		
1000W	三菱(M1KH) Mitsubishi(M1KH)	φ145	M8
	松下(P1KH) Panasonic(P1KH)		

行程(mm)Stroke	50	100	150	200	250	300	350	400	450	500	550	600	650	700	750
重量(kg)Weight	12.7	13.4	14.2	14.9	15.7	16.4	17.2	17.9	18.7	19.4	20.2	20.9	21.7	22.4	23.2
行程(mm)Stroke	800	850	900	950	1000	1050	1100	1150	1200	1250	1300	1350	1400	1450	1500
重量(kg)Weight	23.9	24.7	25.4	26.2	26.9	27.7	28.4	29.2	29.9	30.7	31.4	32.2	32.9	33.7	34.4

注：所有对应重量均为裸缸重量(不含减速机、电机的重量)!

©2024 LIMON® - All rights reserved - The contents of this document are subject to change without prior notice.

操作说明 Opeartion Description

直连型电缸结构图 *Structural diagram of direct connected electric cylinder*

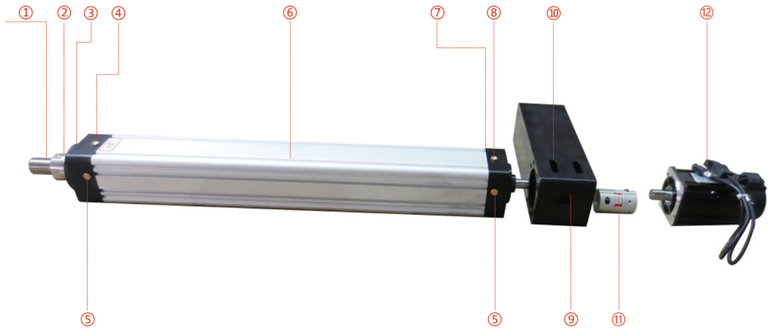

1.活塞杆连接头 *Pston Rod Conngctor*
2.丝杆注油孔 *Screw Oil Hole*
3.前端盖 *Front End Cap*
4.活塞杆导杆注油孔 *Piston Rod Guide Oil hole*
5.排气孔 *Went Hole*
6.缸桶 *Cylinder Barrel*
7.后端盖 *Back End cap*
8.轴承注油孔 *Bearing Oil Hole*
9.马达安装座 *Motor Mounting Base*
10.连轴器调节孔 *Coupling Regulation Hole*
11.连轴器 *Coupling*
12.电机 *Motor*

转折型电缸结构图 *Structural diagram of turning type electric cylinder*

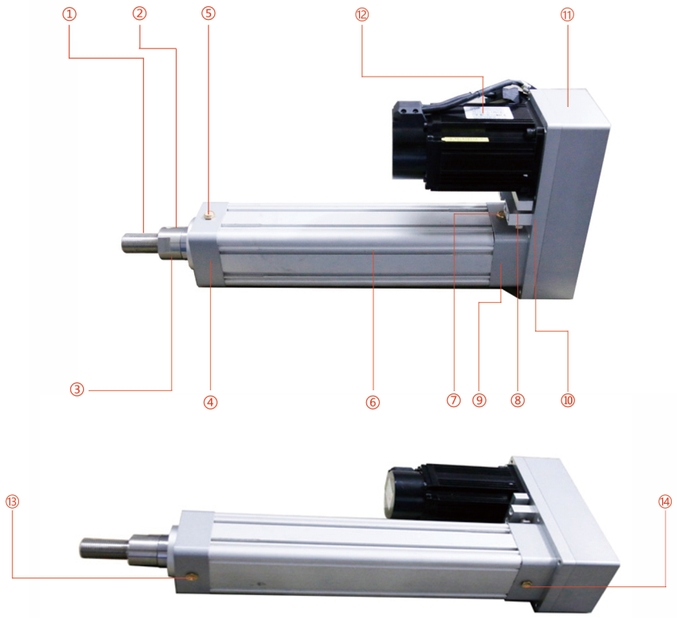

1.活塞杆连接头 *Piston Rod Connector*
2.丝杠注油孔 *Screw Oil Hole*
3.活塞杆 *Piston Rod*
4.前端盖 *Front End Cap*
5.前排气孔 *Front Vent Hole*
6.缸桶 *Cylinder Barrel*
7.后排气孔 *Back Vent Hole*
8.同步带张紧机构 *Synchronous BeltTensioner*
9.后端盖 *Back EndCap*
10.电机安装板 *Motor Mounting Plate*
11.加强型底座 *Reinforced Base*
12.电机 *Motor*
13.活塞杆导杆注油孔 *Piston Rod Guide Oilhole*
14.轴承注油孔 *Bearing Oil Hole*

直接连接电钢电机装配注意事项 *Notice ofthe Indirect electric steel motor assembly*

一、连轴器的装配 *Coupling Assembly*

1.连轴器顶紧装置对准电机的键槽(如图所示)
Coupling tightening device aligns with the keyway of the motor(asthe picture shows)



2.连轴器和电机轴连接好以后应先锁附顶紧螺丝然后再锁连轴器的锁紧螺丝(如图所示)
After the coupling and motor shaft are connected, lock the top screw and then lock the coupling's locking screw.

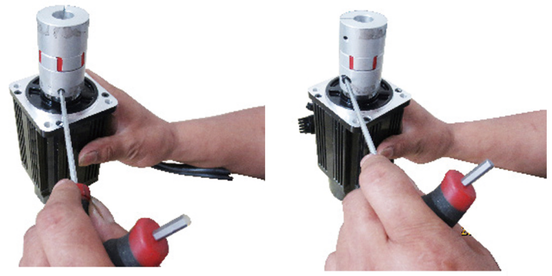

3.连轴器上下部分应有1mm的间隔空隙，主要防止连轴器在运动的过程中因挤压，扭曲所产生的异响(如图所示)
The upper and lower parts ofthe coupling should have a gap of i mm, which mainly prevents the couplingfrom being squeezed and distorted to cause the noise during the movement.



间接连接电钢电机装配注意事项 *Notice of the Indirect electric steel motor assembly.*

我司所有间接连接的产品全系采用国外先进的张紧套技术与目前国内所探用的键槽技术有所不同，因此我们在装配间连接的产品电机时应该注意以下几个方面:
LIMON'sindirect connecting products are allapplied with oversea advanced tensioning technology and diferentfromothe domestic keyway technology;so whenassembling theindirect connecting motor , please notice as below:

1.先固定电钢端的同步带输(如图所示):
Timing pulley with fxed electric steel end(as the picture):



2.其次再固定电机端的同步带轮(如图所示):
Fix the timing pulley in the motor end(as the picture):



3.最后调整张紧机构(如图所示):
Adiusting the tensioning device:



注:在调节张紧机构时应使张力测试仪参照相对应的参数标准进行调节。
Note: When adjusting the tensloning device, the tenslon tester should be adjusted according to the corresponding parameter standard.

©2024 LIMON® - All rights reserved - The contents of this document are subject to change without prior notice.

操作说明
Opeartion Description

电缸注油 *Oiling of The Electric cylinder*

电缸在每行走100km(转换成时间为半个月注油一次，按照每天8小时的工作时间计算)需注油一次。
When walking 100km,the cylinder needs to be added the oiladding the oil once in half month ,according to the time 8 working hours in one dayi

注油工具:高压黄油枪
Oiling tool:high-pressure grease gun



注油型号:3号特种润滑脂
Oiltype:No.3 special grease



第一步:丝杆注油(如图所示)
First,add the oil in ball screw(see the pic)

手持装满润滑脂的黄油枪，插入活塞前端注油孔，用力下压7-8次即可。
Hold the oil gun (full with oil and grease) ,and push into the front pistonoil hole , press down hardly for 7 -8 times.

第二步:活塞样，导样注油(如图所示)
Second,add the oil in piston rod quide(see the pic)

手持装满润滑脂的黄油枪，插入电缸前端盖的注油孔，用力下压7-8次即可。
Hold the oil gun (full with oil and grease) ,and push into the front end capoil hole , press down hardlyfor 7 -8 times.

第三步:轴承注油(如圆所示) *Third,add the oil in the bearing(see the pic)*
手持装满润滑脂的黄油枪，插入电缸后端盖的注油孔，用力下压7-8次即可。
Hold the oil gun (full with oil and grease) , and push into the back end cap oil hole ,press down hardly for 7 -8 times.



©2024 LIMON® - All rights reserved - The contents of this document are subject to change without prior notice.